Direction commerciale
Animation technique réseau

WORKSHOP MANUAL

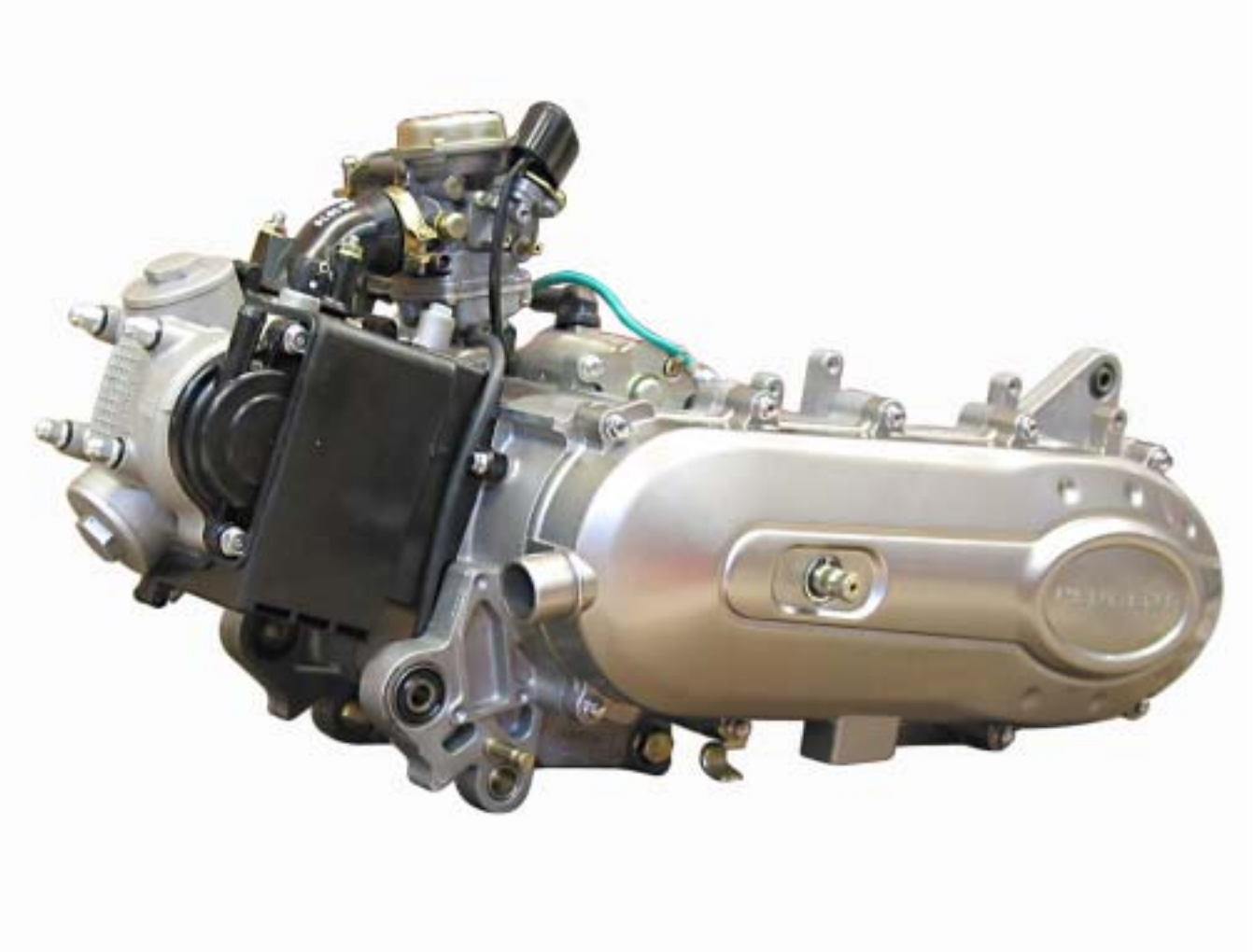

50 CC ENGINE 4 STROKE
2 VALVES
SYM

TABLE OF CONTENTS

TABLE OF CONTENTS **1**

PRODUCTS DANGER SYMBOLS USED **3**

CHARACTERISTICS **5**

Capacities 5

SPECIAL IMPORTANT POINTS **6**

Oil and fuel 6

TIGHTENING TORQUES **7**

SPECIAL TOOLS **8**

Standard tools 9

OPERATION **10**

Putting the engine on the stand 10

Changing the engine oil 10

PRIMARY TRANSMISSION **11**

Removal of the primary transmission cover 11

Removal of the drive pulley 11

Removal of the driven pulley 12

Changing the drive pulley bearings 12

Checking the drive belt 12

Removal of the clutch lining assembly 13

Refitting the clutch lining assembly 14

Removal of the starter system 15

Fitting the starter system 16

SECONDARY TRANSMISSION **17**

Removal of the secondary transmission 17

Replacing the bearings of the relay box 18

Crankcase 18

Relay box cover 18

Reproduction ou traduction, même partielle, interdite sans autorisation écrite de Peugeot Motocycles

CARBURETTOR 19
Removal of the carburettor 19
Removal of the choke 19
Removal of the starter holder and its gasket 19
Removal of the throttle valve 20
Removal of the float, needle valve and jets 20
Removal of the mixture screw 22
Removal of the pick-up pump 22
Removal of the pick-up pump suction valve 22
Removal of the deceleration enrichment device 23
Removal of the carburetor heater 23
Removal of the intake pipe 24
MAGNETO FLYWHEEL/FREEWHEEL 25
To remove the magneto flywheel 25
Removal of the overrunning clutch 26
Checking the overrunning clutch 27
CYLINDER HEAD/CYLINDER/PISTON 29
Removal of the cylinder head 29
Removal of the camshaft and/or rockers 31
Removal of the valves or valve stem seals 32
Removal of the cylinder / piston 34
Checking the cylinder 35
Checking the piston 35
Checking the piston rings 35
Installing the piston rings on the piston 35
Fitting the piston 36
Fitting the cylinder 36
Setting the timing 38
Checking the timing 39
Installing the valve clearance 40
Checking the valve clearance 40
CRANKCASE 41
Removal of the crankshaft 41
Checking the crankshaft and conrod assembly 42
Fitting the conrod and crankshaft assembly 43

Reproduction ou traduction, même partielle, interdite sans autorisation écrite de Peugeot Motocycles

PRODUCTS DANGER SYMBOLS USED

Protection of individuals and of the environment.

	Möbius band	Recyclable.	Means that the product or the package can be recycled. However, this does not guarantee that the product will be recycled.
	Irritant	The product can irritate the skin, eyes and repiratory organs.	Avoid contact with skin and clothes. Wear gloves, safety goggles and appropriate clothes such as a cotton overall. Do not breath fumes. If in contact, wash thoroughly with water.
	Flammable	The product is flammable.	Keep it away from flames or any heat source (barbecue, radiator, heater, etc.). Do not leave the product in the sun.
	Corrosive	The product can damage living tissues or other surfaces.	Avoid contact with skin and clothes. Wear gloves, safety goggles and appropriate clothes such as a cotton overall. Do not breath fumes.
	Explosive	The product can explode under certain circumstances (flame, heat, impact, friction).	Avoid impacts, friction, sparks and heat.
	Hazardous to the environment	The product affects fauna and flora. Do not dump it in dustbins, sinks or in the environment.	The ideal solution is to bring this product to your nearest household waste recycling centre.
	Toxic	The product can seriously affect health if it is inhaled, ingested or in contact with skin.	Avoid direct contact with the body, even by inhalation. If you feel unwell, seek medical advice immediately.
	Do not throw away into a garbage can	One of the product's component is toxic and can be hazardous to environment. For example: Used batteries.	This symbol informs the consumer that the used product shall not be thrown away into a garbage can, but shall be brought back to the merchant or dropped at a specific collection point.
	Compulsory gloves	Operation that can be dangerous for people.	People's safety can be seriously affected if the recommendations are not fully respected.

Reproduction ou traduction, même partielle, interdite sans autorisation écrite de Peugeot Motocycles

	People's safety	Operation that can be dangerous for people.	People's safety can be seriously affected if the recommendations are not fully respected.
	Important	Operation that can be hazardous to the vehicle	Indicate the specific procedures that shall be followed in order not to damage the vehicle.
	Good operating condition of the vehicle	The operation must be carried out in strict compliance with the documents.	Serious damage to the vehicle and in certain cases a cancellation of the warranty can be involved if the recommendations are not fully respected.
	Note	Operation that can be difficult.	Indicate a note which gives key information to make the procedure easier.
	Lubricate	Lubricate the parts to be assembled.	Indicate the specific procedures that shall be followed in order not to damage the vehicle.
	Grease	Grease the parts to be assembled.	Indicate the specific procedures that shall be followed in order not to damage the vehicle.
	Glue	Glue the parts to be assembled.	Indicate the specific procedures that shall be followed in order not to damage the vehicle.
	New part	Use a new part.	Indicate the specific procedures that shall be followed in order not to damage the vehicle.

Reproduction ou traduction, même partielle, interdite sans autorisation écrite de Peugeot Motocycles

CHARACTERISTICS

	50 cc
Marking	XS1P37QMA-2
Type	4-stroke single-cylinder 2 valves per cylinder with chain driven overhead camshaft
Cooling	By a circulation of forced air by means of a turbine on the flywheel magneto
Bore x stroke	37 x 46 mm
Cubic capacity	**49.5 cc**
Max. power output	2.8 kW at 8000 rpm
Max. torque rating	3.5 Nm at 6500 rpm
Lubrication	Trochoid pump driven by a gear set from the crankshaft
Transmission	By 2 variable pulleys and V-type belt
Clutch	Centrifugal automatic
Exhaust	Catalytic
Spark plug	NGK CR6HSA
Magneto flywheel	80 W
Fuel supply	Carburettor Keihin NVC18 (c/d)
Standards	Euro 3

■ Capacities

Crankcase	0.7 l
Relay box	0.1 l

Reproduction ou traduction, même partielle, interdite sans autorisation écrite de Peugeot Motocycles

SPECIAL IMPORTANT POINTS

■ Oil and fuel

This engine is designed to run on 95 or 98 unleaded fuel only.
Never run the machine with a petrol/oil mixture.

Fuel pipes must absolutely be changed if there are any signs of wear, cracks, etc.
The clips are specific, they must always be changed each time they are removed and replaced with new genuine parts clips.

Petrol is highly inflammable, do not smoke in the working area and avoid proximity to flames or sparks.

Reproduction ou traduction, même partielle, interdite sans autorisation écrite de Peugeot Motocycles

TIGHTENING TORQUES

Spark plug	12 Nm
Filler cap	20 Nm
Screen	15 Nm
Cylinder head • Nut Ø 6 mm • Screw Ø 6 mm	 20 Nm 12 Nm
Camshaft gear cover	10 Nm
Camshaft gear	20 Nm
Valve clearance covers	15 Nm
Automatic tensioner	10 Nm
Automatic tensioner plug	8 Nm
Chain tensioner	10 Nm
Inlet manifold	10 Nm
Cylinder casings	12 Nm
RH casing cover	12 Nm
Freewheel	90 Nm
Oil pump	10 Nm
Transmission cover	10 Nm
Relay box cover	22 Nm
Relay box drain plug	10 Nm
Starter motor	10 Nm
Rotor	55 Nm
Turbine	10 Nm
Stator	10 Nm
Engine speed sensor	10 Nm
Drive pulley	55 Nm
Driven pulley	55 Nm
Clutch plate and shoes	55 Nm

Reproduction ou traduction, même partielle, interdite sans autorisation écrite de Peugeot Motocycles

SPECIAL TOOLS

	Tool N°	Designation	Used with
	064765	Engine mount	755982
	068007	Protective end-piece small model	750806
	750806	Flywheel puller	68007
	752127	Clutch compression tool	752361
	752237	Adjustable pin wrench	
	752361	39 mm pipe wrench	752127

	Tool N°	Designation	Used with
	754035	Valve lifter	
	755585	Bearing extractor tool	
	755982	Engine mount adapter	64765
	756668	Seal piston	
	757990	Seal piston	
	800673	Freewheel nut tool	

(*) New or modified tool

Reproduction ou traduction, même partielle, interdite sans autorisation écrite de Peugeot Motocycles

■ Standard tools

	Heat gun
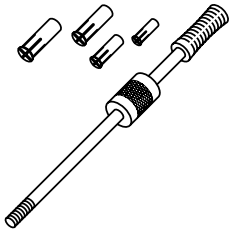	Intertia type extractor tool for bearings from 6 to 18 mm Type: Facom U.49PJ3
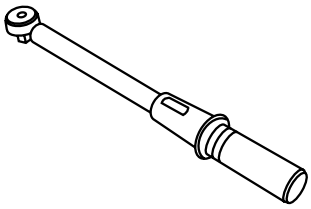	Automatic resetting type torque wrench 40 to 200 Nm Type: Facom S.208A200

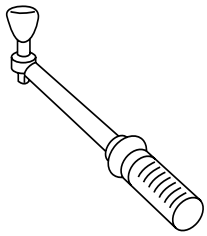	Automatic resetting type torque wrench 5 to 25 Nm Type:Facom R.306A25
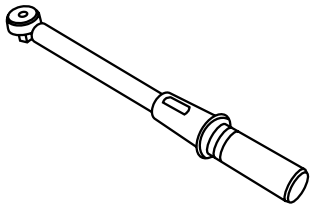	Automatic resetting type torque wrench 10 to 50 Nm Type: Facom J.208A50

Reproduction ou traduction, même partielle, interdite sans autorisation écrite de Peugeot Motocycles

OPERATION

■ Putting the engine on the stand

- Fit the engine to adapter P/N 755982.
- Put the assembly on stand P/N 064765 clamped in the jaws of a vice.

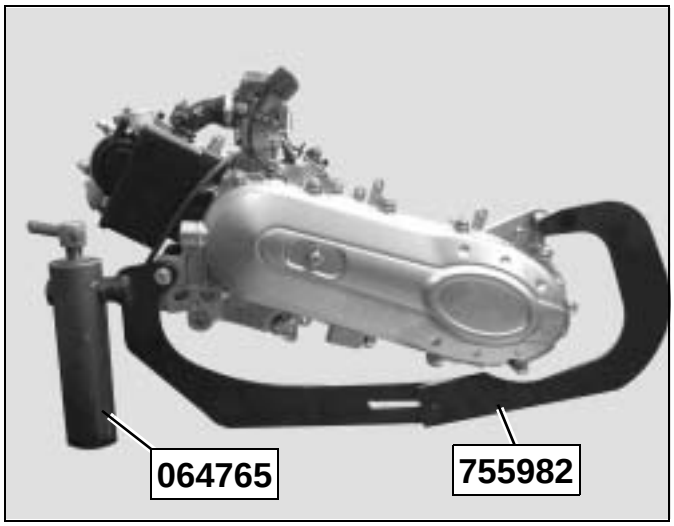

■ Changing the engine oil

	To drain the engine remove the cap and let the oil drip.

Tightening torque: 20 Nm.

N	**Replace the seal each time you change the oil.**

- Remove the strainer cap (1) and clean the strainer (2).

Tightening torque: 15 Nm.

	Every time oil is changed, the filter (2) must be cleaned and the O-ring changed (3).

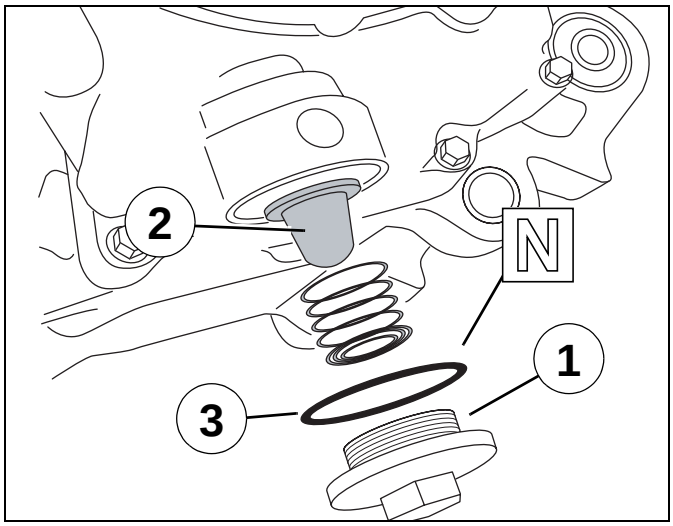

Reproduction ou traduction, même partielle, interdite sans autorisation écrite de Peugeot Motocycles

PRIMARY TRANSMISSION

■ Removal of the primary transmission cover

- Remove the transmission cover (10 screw).
- Remove the paper gasket and the two 2 centering pins.

Tightening torque: 10 Nm.

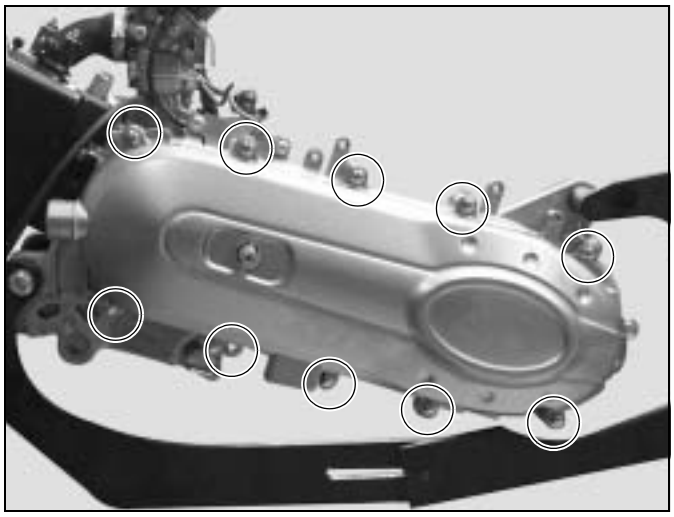

■ Removal of the drive pulley

- Hold the fixed flange with tool P/N 752237.
- Remove the nut (1) and washer (2) from the fixed flange.
- Remove the fixed flange.

Tightening torque: 55 Nm.

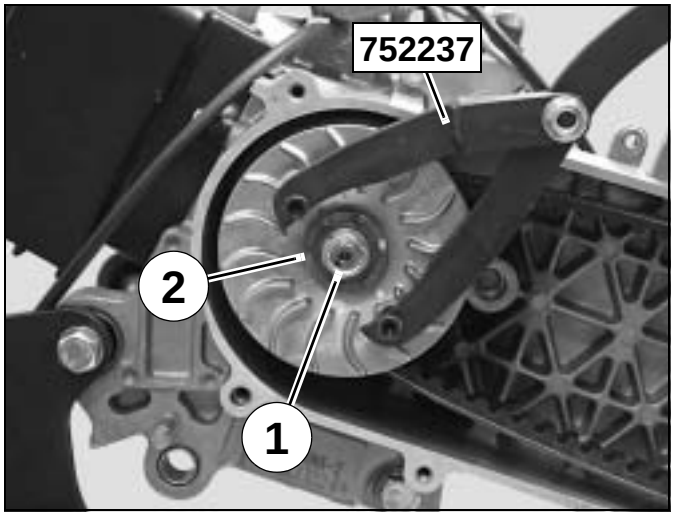

- Remove the belt (3).
- Remove the plastic spacer (4).
- Remove the drive pulley (5) with the guide hub (6).

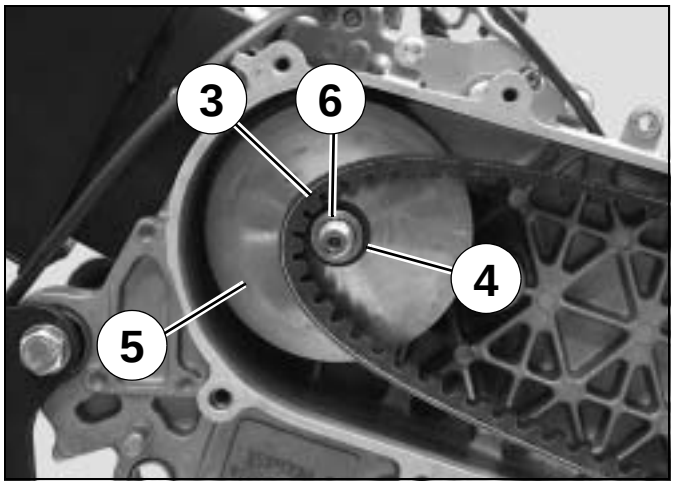

Reproduction ou traduction, même partielle, interdite sans autorisation écrite de Peugeot Motocycles

■ Removal of the driven pulley

- Lock the clutch drum (1) with the pin wrench P/N 752237.
- Remove the nut (2).
- Remove the clutch drum and the clutch and drive pulley assembly.

Tightening torque: 55 Nm.

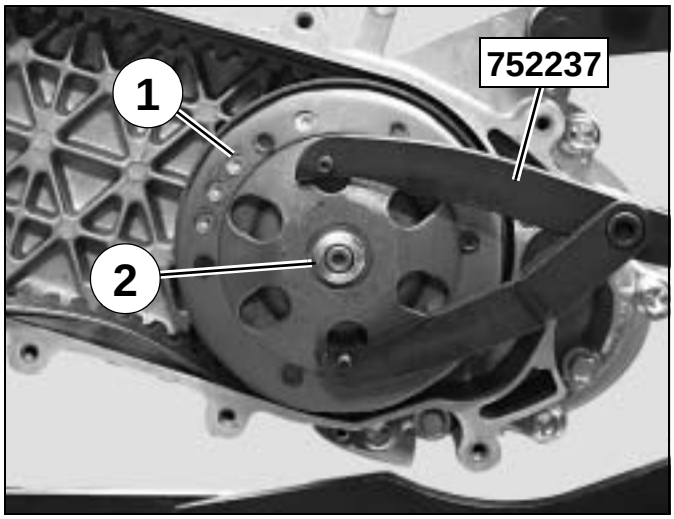

■ Changing the drive pulley bearings

- Remove the ramp (1) and its 3 guides (2).
- Remove the moving flange (4)
  6 bearings (3).

	The bearings must be changed if they show major signs of wear. **The guides shall be replaced if they show signs of wear.**

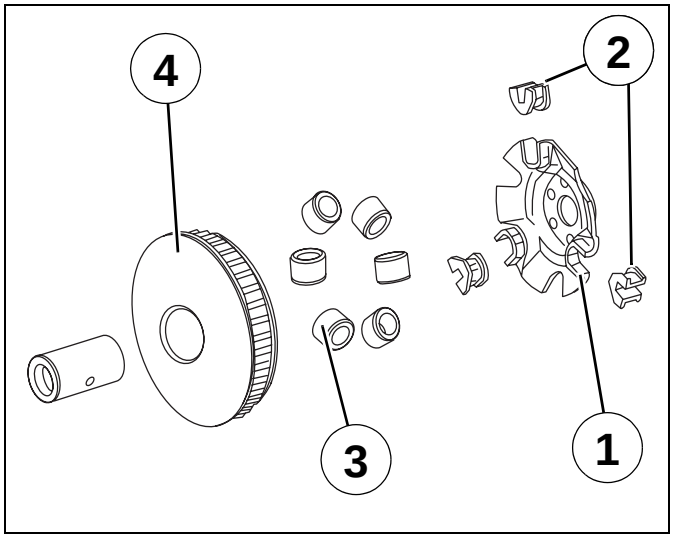

■ Checking the drive belt

- Measure the width of the belt (A).

Minimum width: 17.2 mm.

- Make sure the belt is not cracked.

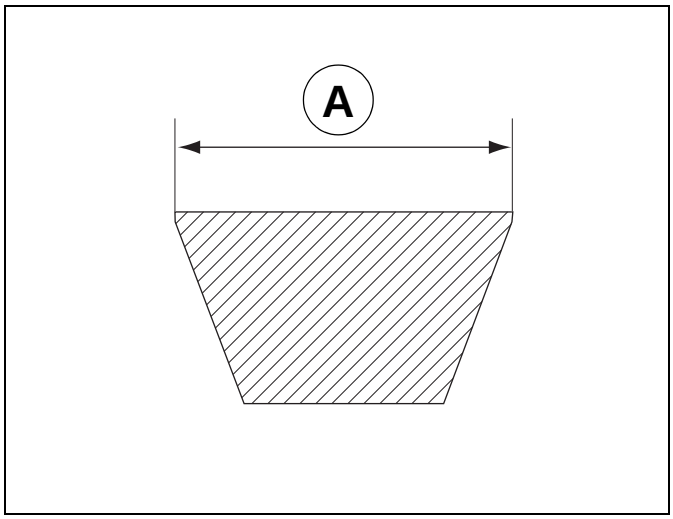

Reproduction ou traduction, même partielle, interdite sans autorisation écrite de Peugeot Motocycles

Reassembly:

- Proceed in reverse order to disassembly and do not grease the bearings.
- When refitting, respect the way the rollers are installed.
- Grease the moving flange bore lightly (high temperature grease).

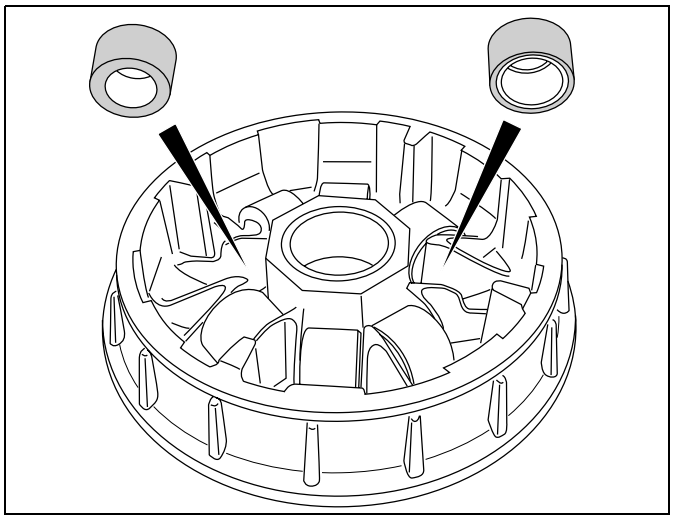

■ Removal of the clutch lining assembly

- Using the depth calliper, measure the thickness of the clutch linings.

Mini. thickness: 2 mm.

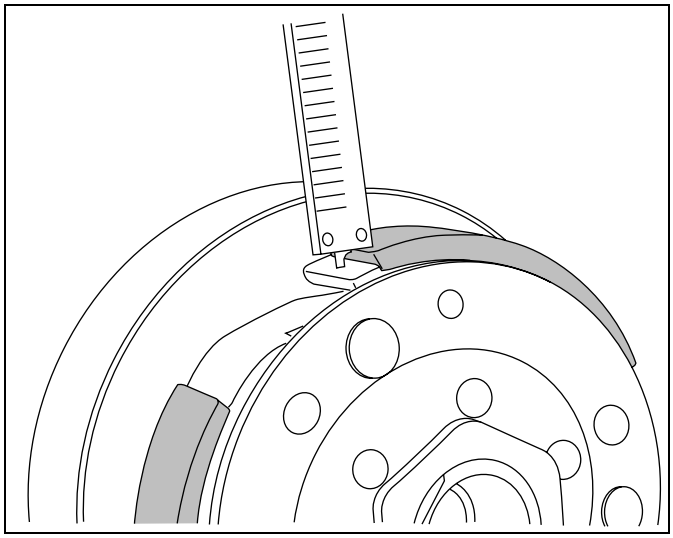

- Compress the clutch drive pulley and driven pulley assembly with the tool P/N 752127 clamped in the jaws of a vice.
- Remove nut (1) using spanner P/N 752361.
- Slacken tool P/N 752127.

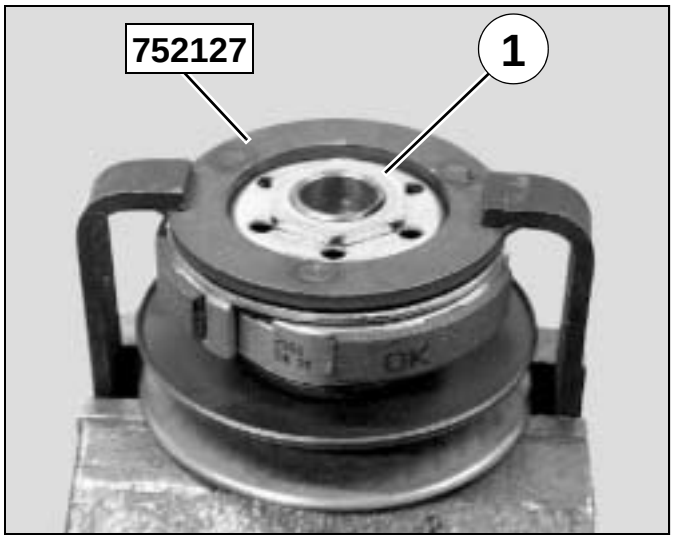

Reproduction ou traduction, même partielle, interdite sans autorisation écrite de Peugeot Motocycles

- Remove the clutch linings (2), the upper centring sleeve (3), the spring (4), and the lower centring sleeve (5).
- Remove the 3 pins (6) from the variable speed drive seat.
- Separate the fixed (7) and rotating (8) flanges.
- Make sure surface of the plates in contact with the belt does not show any cracks or signs of abnormal wear.

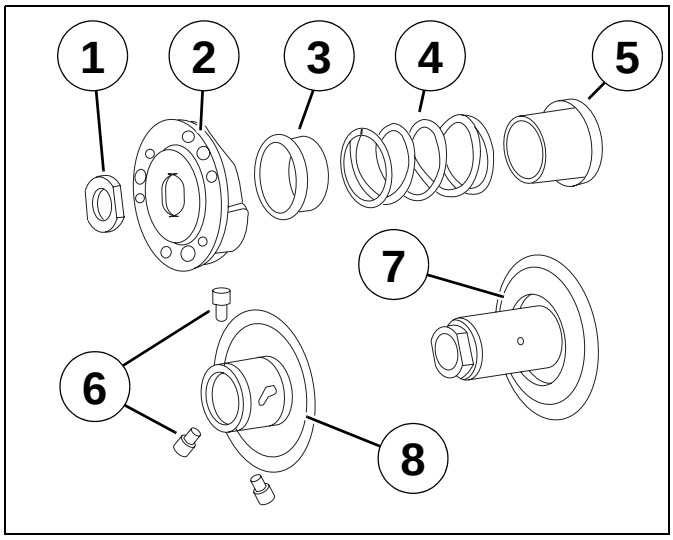

■ Refitting the clutch lining assembly

- After checking the 2 lip seals (9) and the 2 O-rings (10) of the rotating flange (8) are in good condition, grease the governor seat 3 pins (6) (high temperature grease) and assemble the parts in reverse order to removal.
- Compress the clutch drive pulley and driven pulley assembly with the tool P/N 752127.
- Tighten the nut (1).

Tightening torque: 55 Nm.

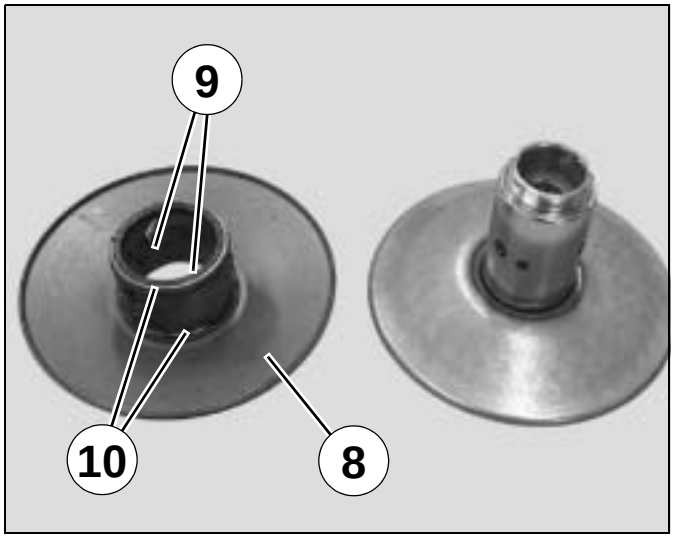

✓	**Before fitting the clutch drive pulley and driven pulley to the input shaft, fit the belt into the pulley bottom by opening the flanges by hand.**

- Fit the clutch drive pulley and driven pulley assembly.
- Fit the clutch cover.
- Fit and tighten the nut.

Tightening torque: 55 Nm.

- Fitting the drive pulley assembly.
- Fit and tighten the nut.

Tightening torque: 55 Nm.

- Install the transmission cover. (10 screw).

Tightening torque: 10 Nm.

Reproduction ou traduction, même partielle, interdite sans autorisation écrite de Peugeot Motocycles

■ Removal of the starter system

- Remove the plate (6 screw).

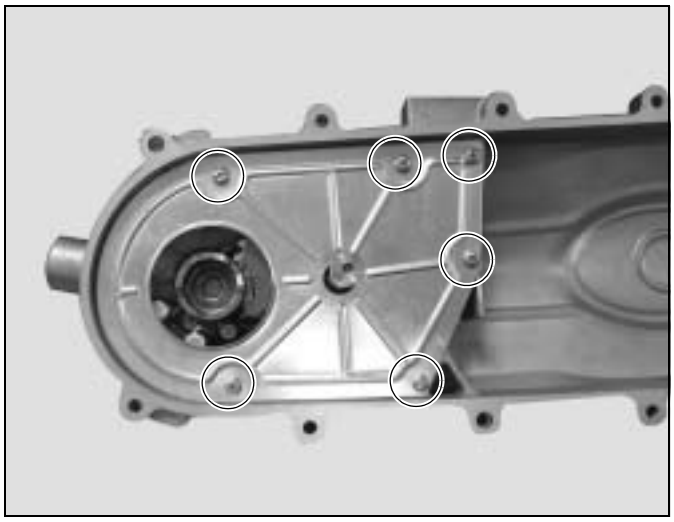

- Actuate the kick starter gear sector (1) by hand and remove the kick starter drive piece (2) and washer.

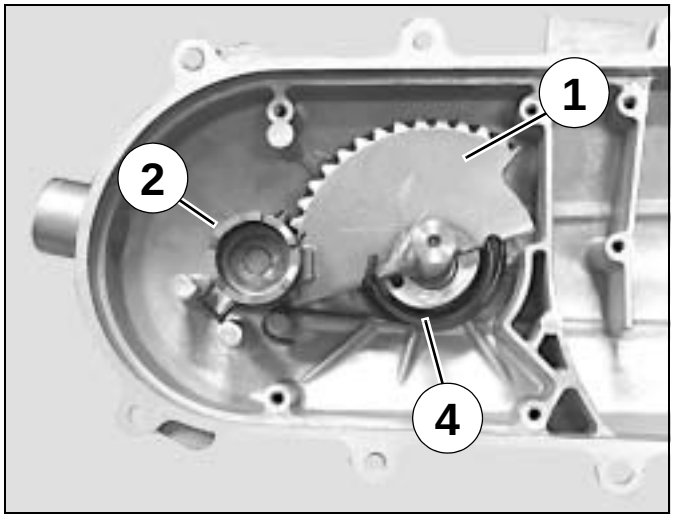

- Remove the lock ring (3), using circlip pliers.
- Remove the washer, the starter gear sector (1) and the spring (4) of the drive train cover.

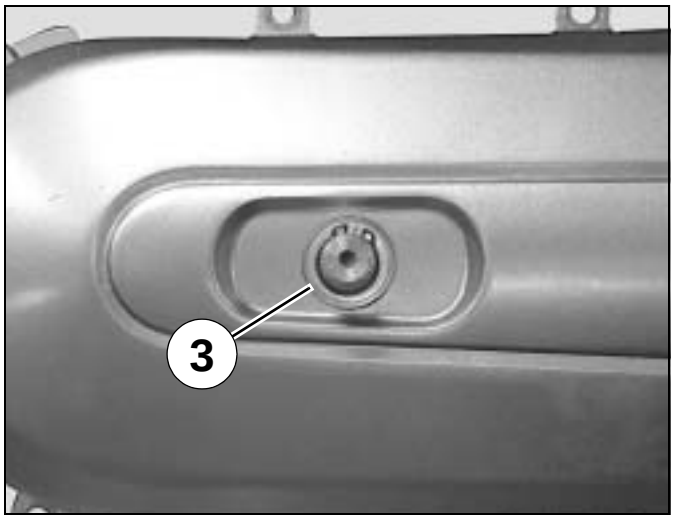

Reproduction ou traduction, même partielle, interdite sans autorisation écrite de Peugeot Motocycles

■ Fitting the starter system

- Fit the return spring (4), hook the longest buckle on the cover's pin (A).
- Fit the starter gear sector (1) into the lubricated bearing sleeve.
- Hook the second buckle (B) of the spring onto the starter gear sector.
- Wind the spring so as to position the kick starter sector on the stop (C) of the cover.

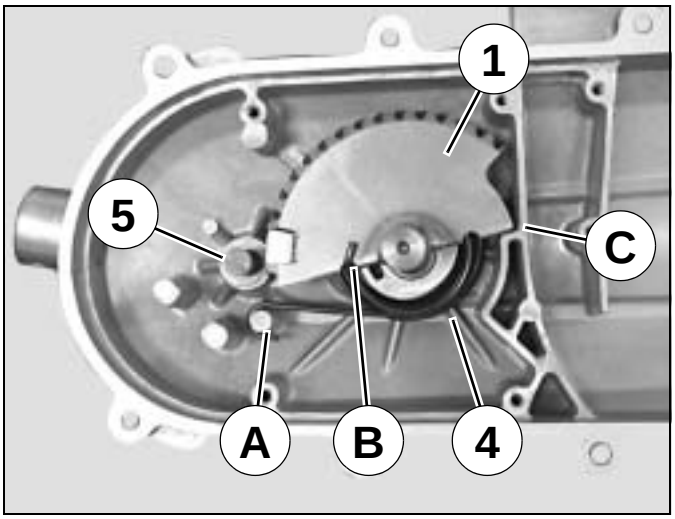

- Turn over the cover, fit the washer and the circlip on the the gear sector spindle.
- Fit the washer (5) on the housing of the kick starter drive piece.
- Wind approximately 1/8th of a turn the gear sector so as to place the kick starter drive piece (2).
- Position the pin (6) of the kick starter drive piece around the boss (D) of the housing.

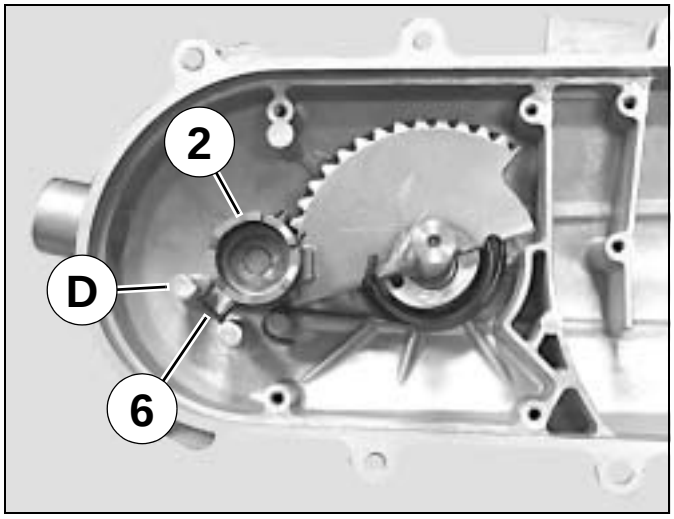

Reproduction ou traduction, même partielle, interdite sans autorisation écrite de Peugeot Motocycles

SECONDARY TRANSMISSION

■ Removal of the secondary transmission

Remove the screw (A) in order to drain the relay box.

Tightening torque: 10 Nm.

Use a drip pan to catch the transfer box oil when the cover is removed.

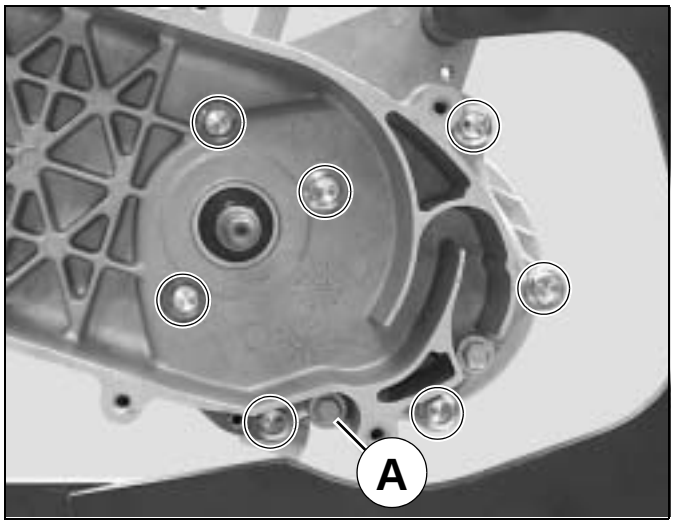

- Remove the secondary transmission cover (7 screw).

Tightening torque: 22 Nm.

- Remove the paper gasket (1) and the 2 locating pins (2).
- Remove washer (3).
- Remove the countershaft (4).
- Remove the secondary shaft (5).

Make a note of the way the secondary shaft pinion is installed.

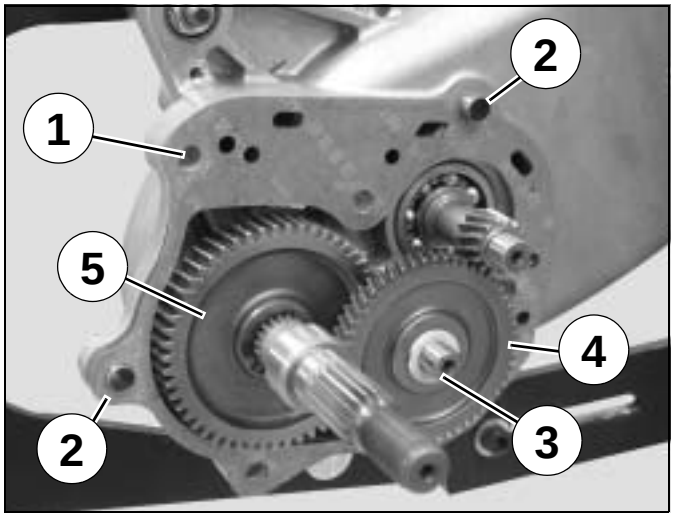

- The primary shaft can be drifted out of the casing using a mallet (6).

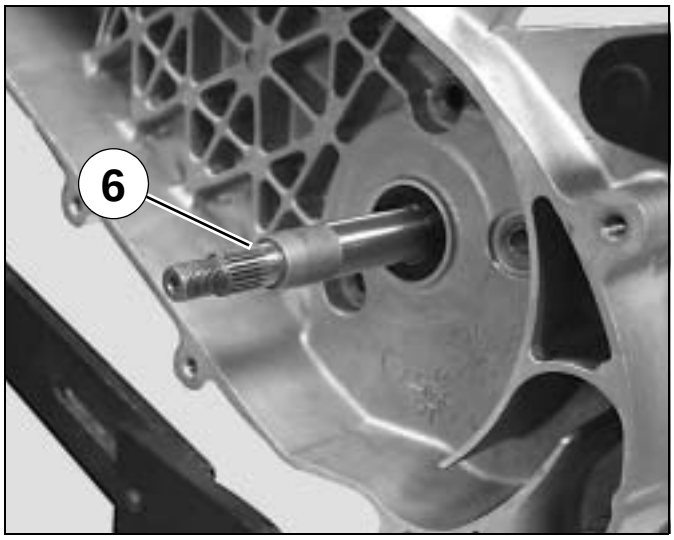

Reproduction ou traduction, même partielle, interdite sans autorisation écrite de Peugeot Motocycles

■ Replacing the bearings of the relay box

Crankcase

	Wear gloves in order not to get burnt.

- Remove the seal.
- Using a heat gun, heat the crankcase to a temperature between 80 and 90°C.
- Use an inertia type extractor tool to remove the bearings.
- While the casing is expanded fit the new bearing fully home in its housing.

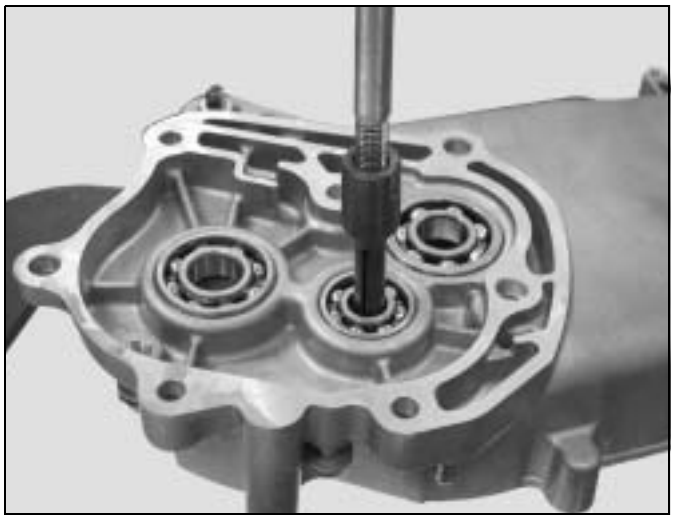

- Using fitting tool P/N 757990, fit a new lightly greased gasket (1).

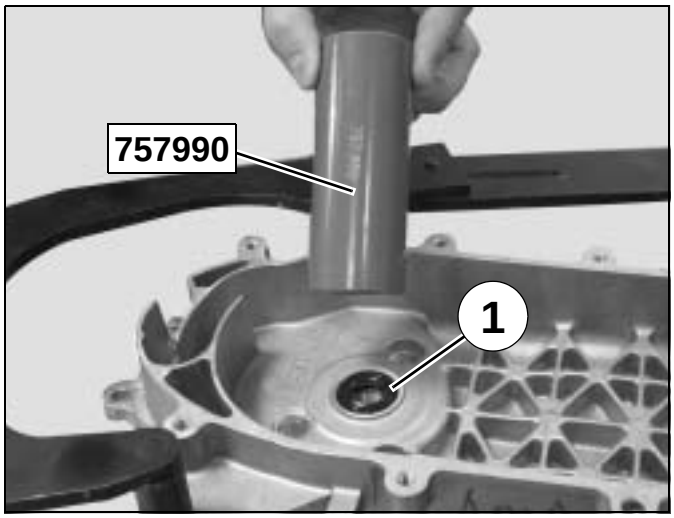

Relay box cover

- Remove the seal.
- Place the cover on its gasket seat surface, heat it (80 to 90°C) until the bearing falls out by itself.
- While the casing is expanded fit the new bearing fully home in its housing.
- Using fitting tool P/N 757990, fit a new lightly greased gasket (2).

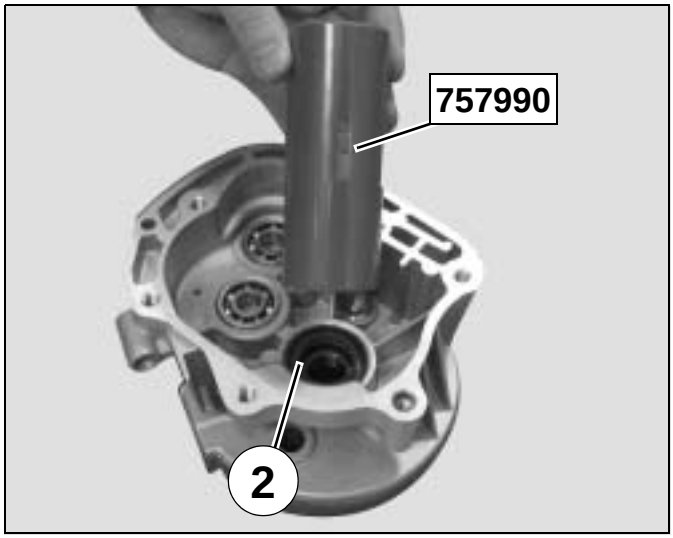

Reproduction ou traduction, même partielle, interdite sans autorisation écrite de Peugeot Motocycles

CARBURETTOR

■ Removal of the carburettor

- Loosen the collar.
- Remove the carburettor.

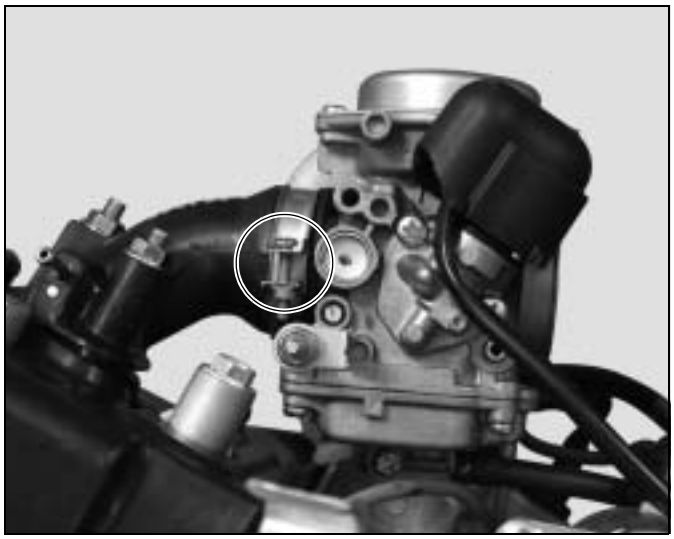

■ Removal of the choke

- Remove the choke cap.
- Remove the screw and the holder plate.
- Locate the position of the choke (1) and then remove it.

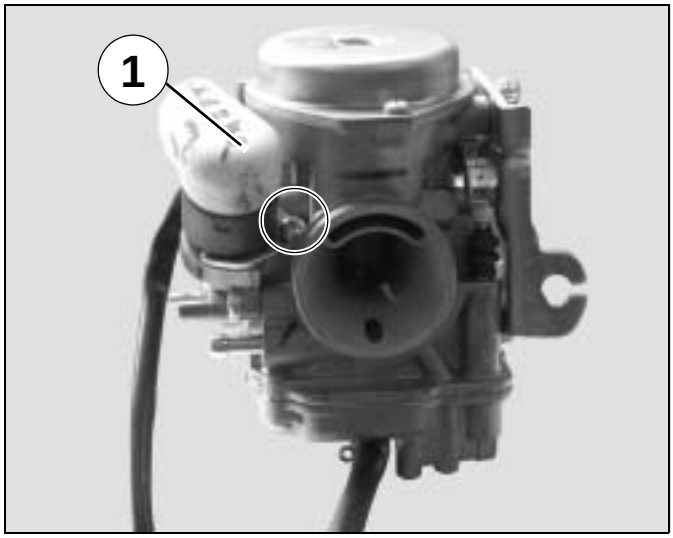

■ Removal of the starter holder and its gasket

- Remove the 2 screws that secure the choke (1).
- Remove the O ring.

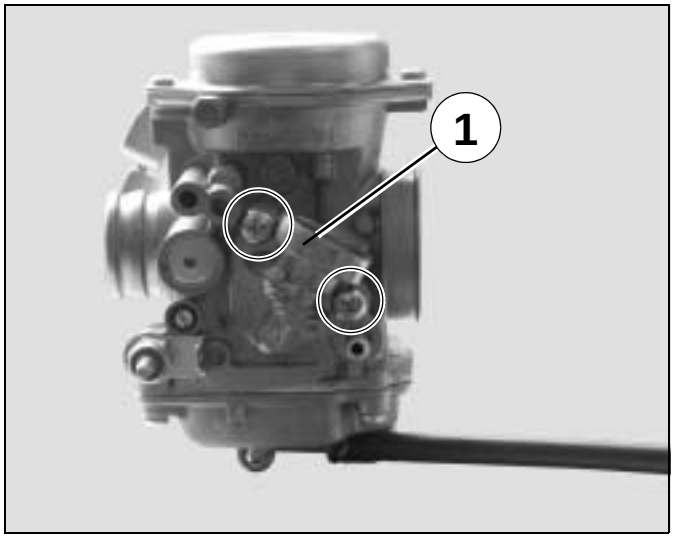

Reproduction ou traduction, même partielle, interdite sans autorisation écrite de Peugeot Motocycles

■ Removal of the throttle valve

- Remove the 2 screws that secure the chamber cap (1).
- Remove the chamber cap.
- Remove the spring.
- Remove the needle, valve and membrane assembly.

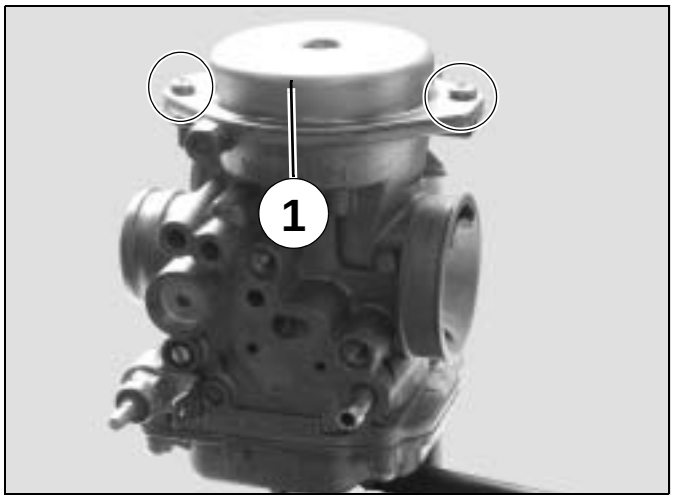

- Remove the needle stop (2).
- Remove the spring (3).
- Remove the needle (4).

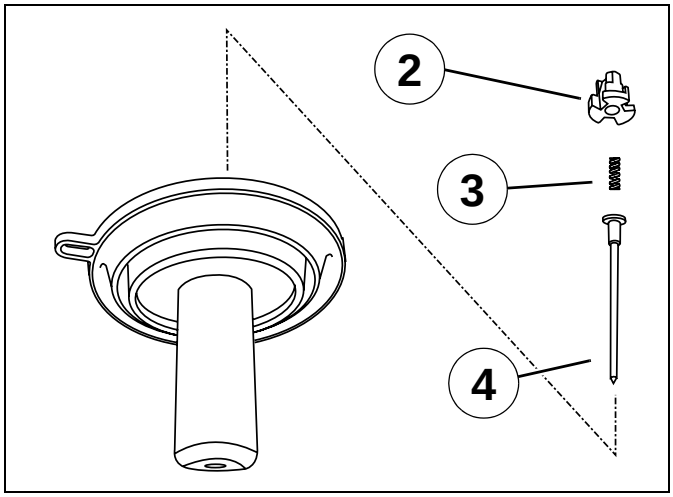

	The height oif the needle is factory set and cannot be modified.

■ Removal of the float, needle valve and jets

- Remove the 4 screws that secure the float chamber (1).
- Remove the float chamber and its O-ring.

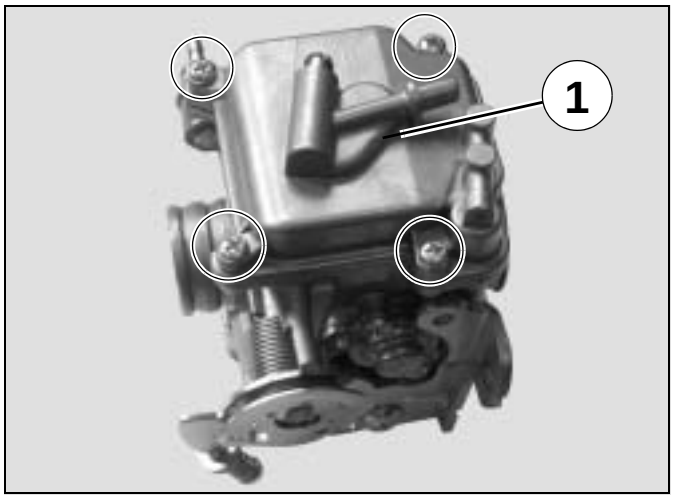

Reproduction ou traduction, même partielle, interdite sans autorisation écrite de Peugeot Motocycles

- Loosen the float pin clamping screw (2).
- Remove the float (3), its pin (4) and the needle valve (5).

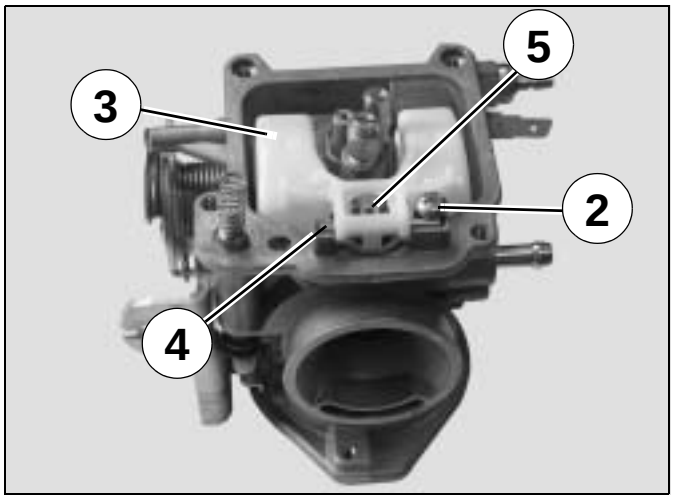

- Remove the idle jet (6).
- Remove the main jet (7).
- Remove the needle well (8).

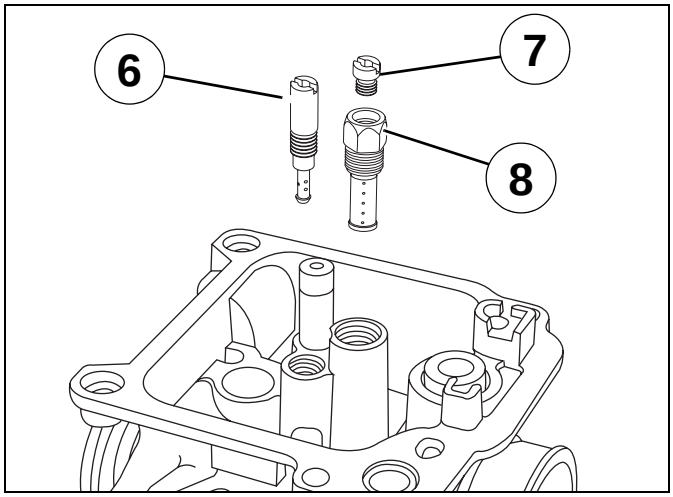

	Check the condition of the needle valve and the needle valve seat (A). **Check the condition of the float chamber O-ring.**

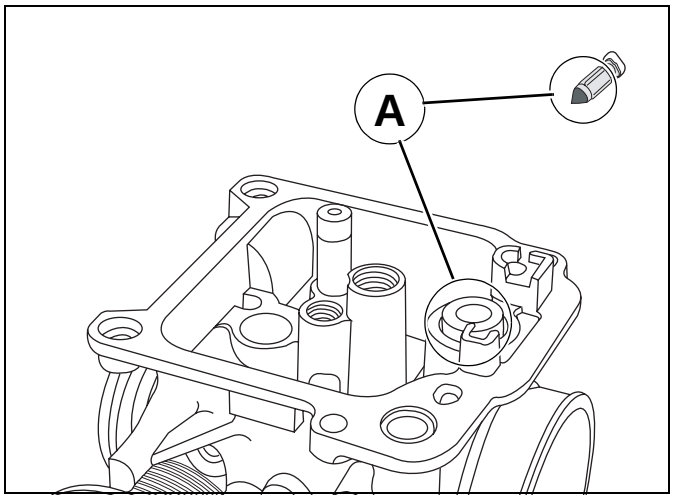

Reproduction ou traduction, même partielle, interdite sans autorisation écrite de Peugeot Motocycles

■ Removal of the mixture screw

- Turn clockwise the mixture control screw (1) while counting the number of turns until it is screwed home.

✓	**When re-fitting, this operation allows you to put it back to its initial adjustment position.**

■ Removal of the pick-up pump

- Remove the 2 screws from the sheathing holder plate.
- Remove the bushing (1) and the protective rubber (2).

✓	**Check the condition of the bushing and the rubber protection.**

- Remove the piston (3).

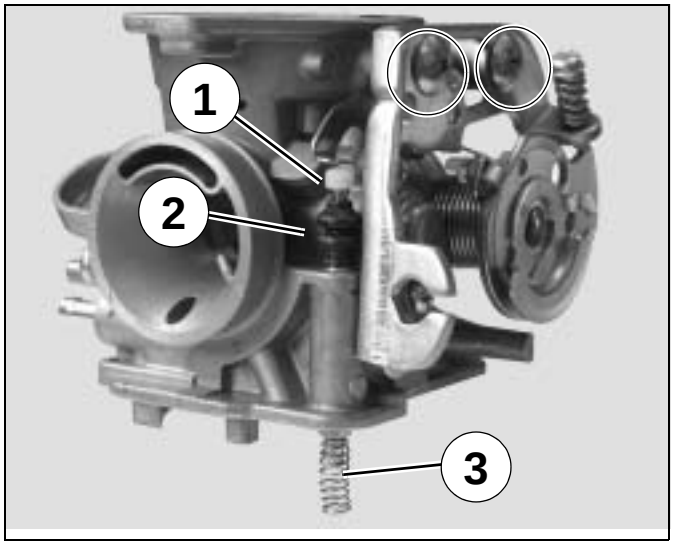

■ Removal of the pick-up pump suction valve

- Remove the jet.
- Remove the spring.
- Remove the ball.

Reproduction ou traduction, même partielle, interdite sans autorisation écrite de Peugeot Motocycles

■ Removal of the deceleration enrichment device

- Remove the 2 bolts that secure the cover.
- Remove the cover.
- Remove the spring.
- Remove the membrane.
- Remove the O ring.

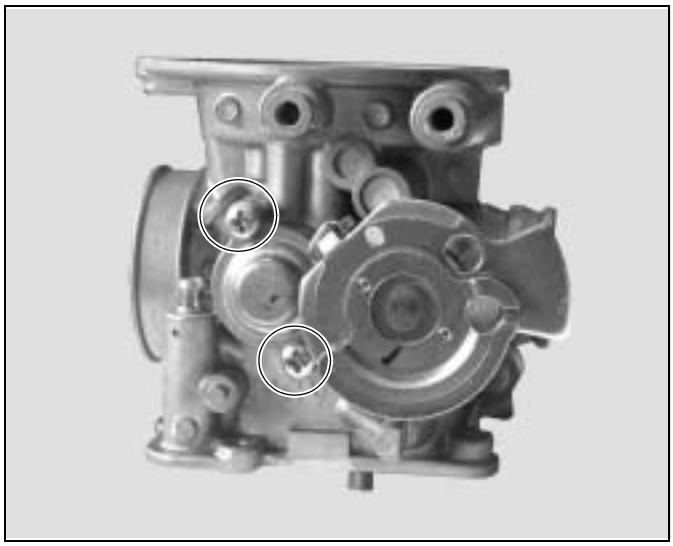

✓	**Check that the membrane is in good condition.** **Check the condition of the O-ring.**

■ Removal of the carburetor heater

- Remove the carburator warming resistor (1).
- Remove the heater earthing connection (2).

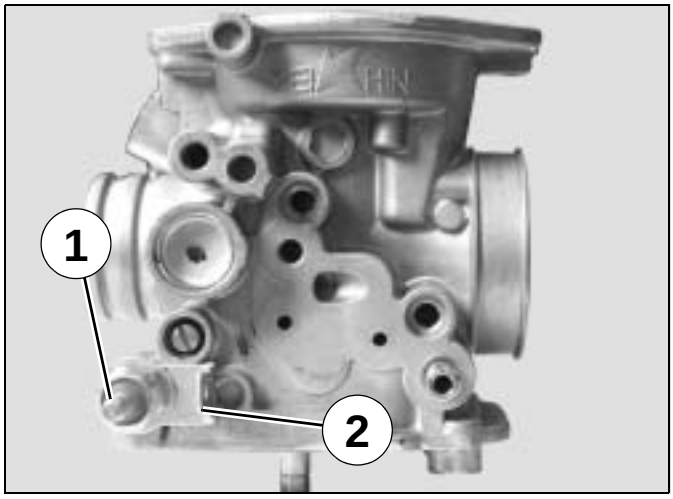

- Clean the carburettor body with Biosane cleanser ref. 754748 or use an ultrasonic cleaning tank.
- Blow into every jet and duct of the carburettor body with compressed air.

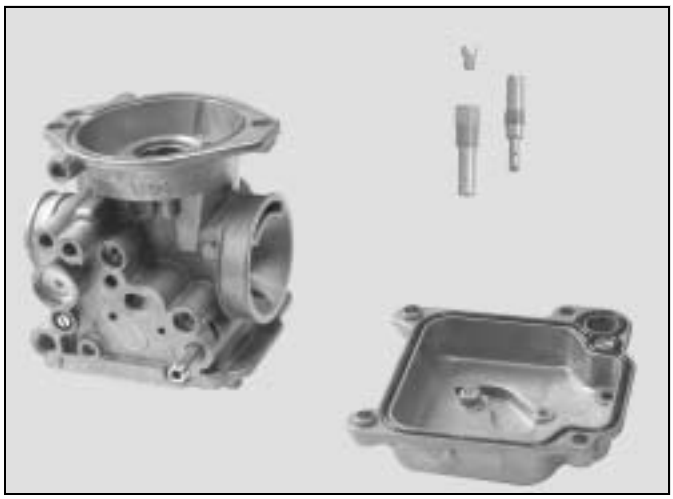

✓	**Do not use any metal tool which can damage the ducts of these items.**

- Re-install all the other components and, if necessary, when starting the engine, readjust according to the values indicated on the technical data card

Reproduction ou traduction, même partielle, interdite sans autorisation écrite de Peugeot Motocycles

■ Removal of the intake pipe

- Remove the inlet coupling (2 nuts).

Tightening torque: 10 Nm.

- Remove the plastic spacer.

	Check the condition of the O-ring. **The paper gasket must be changed each time it is removed.**

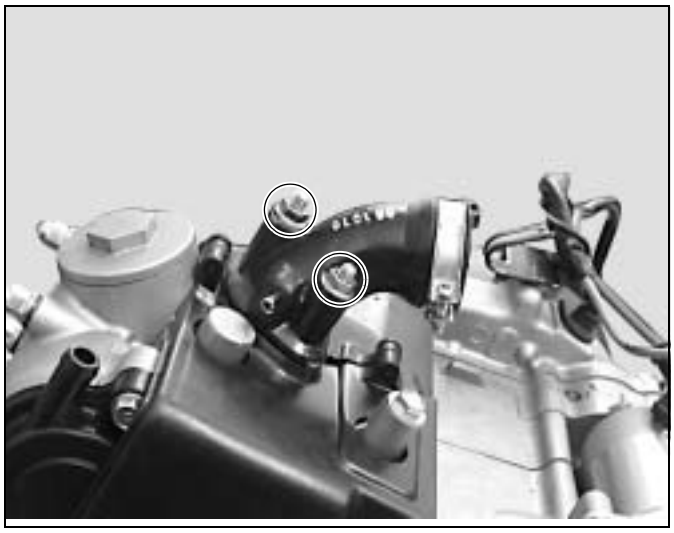

Reproduction ou traduction, même partielle, interdite sans autorisation écrite de Peugeot Motocycles

MAGNETO FLYWHEEL/FREEWHEEL

■ To remove the magneto flywheel

- Remove the volute (4 screw).

- Remove the cylinder housing (3 screw) on the right side.

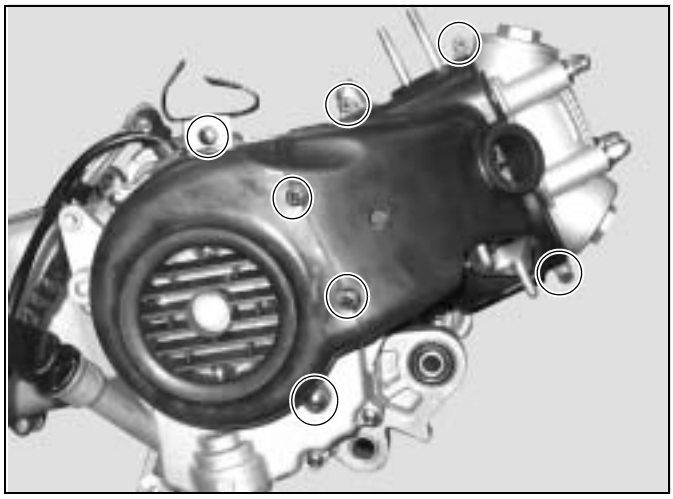

- Remove the turbine (4 screw).

Tightening torque: 10 Nm.

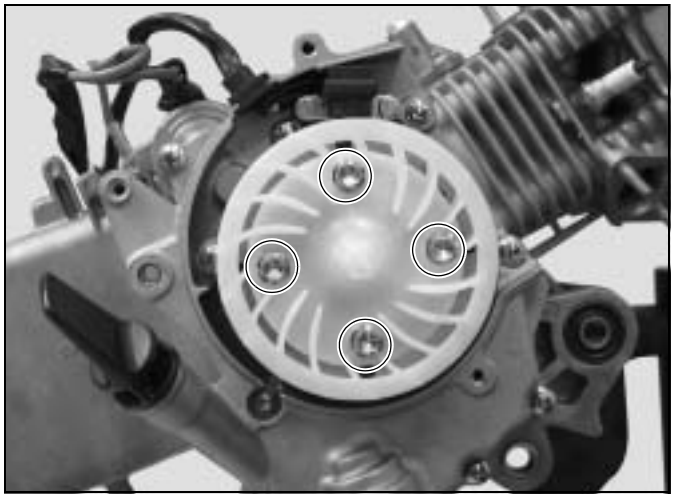

- Lock the rotor with the adjustable pin wrench P/N 752237.
- Remove the nut.

Tightening torque: 55 Nm.

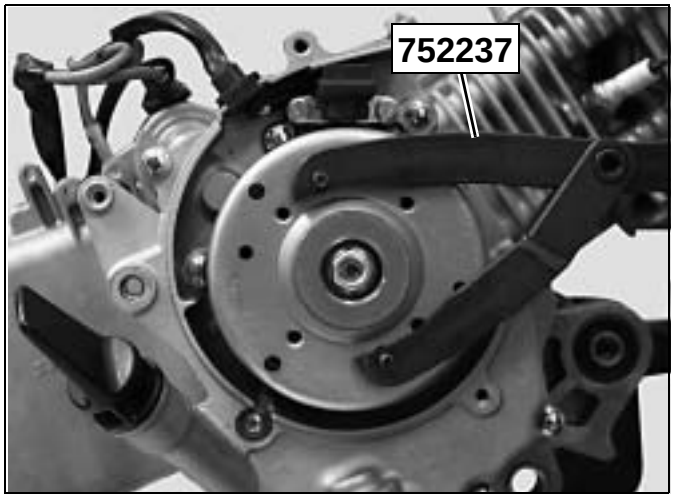

Reproduction ou traduction, même partielle, interdite sans autorisation écrite de Peugeot Motocycles

- Fit protective cap P/N 068007 to the end of the crank assembly.
- Tighten flywheel extractor P/N 750806 on the rotor.
- Lock the flywheel extractor and turn the thrust bolt until the rotor is released.

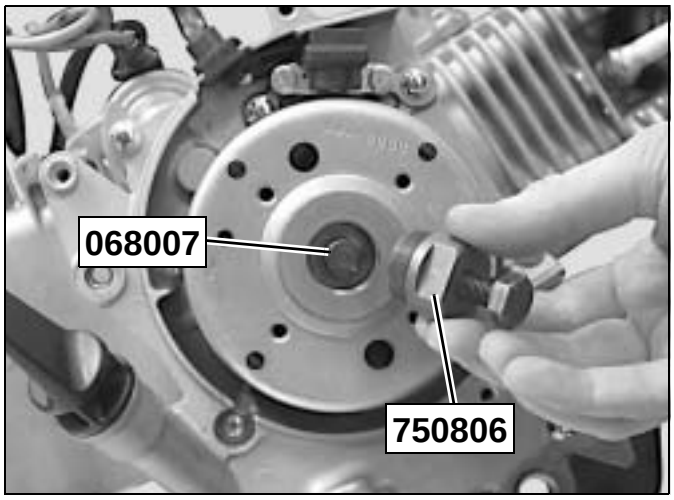

Remove the stator and sensor assembly (3) (2 screws each).

Tightening torque: 10 Nm.

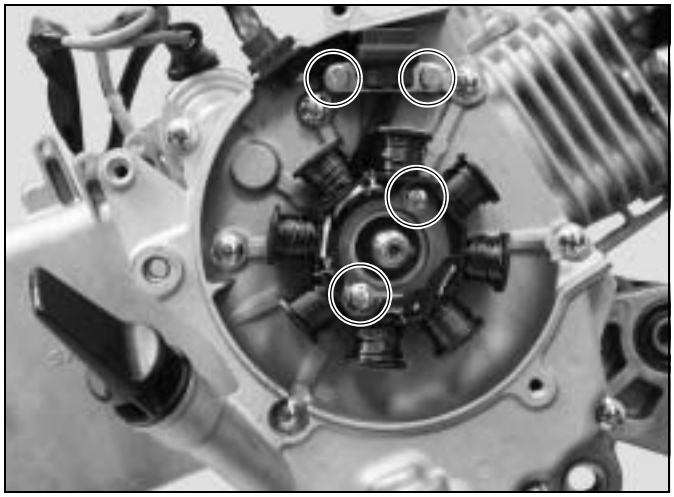

■ Removal of the overrunning clutch

- Remove the flywheel magneto.

- Remove the 8 bolts that secure the RH cover.
  A. Screw Length: 50 mm
  B. Screw Length: 95 mm
  C. Screw Length: 100 mm

- Remove the RH cover.

Tightening torque: 12 Nm.

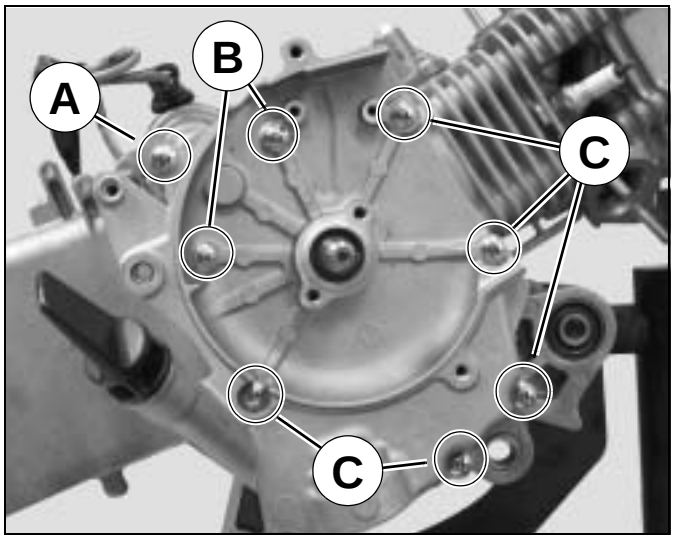

Reproduction ou traduction, même partielle, interdite sans autorisation écrite de Peugeot Motocycles

- Remove the paper gasket (1) and the 2 locating pins (2).
- Remove the starter ring (3).
- Remove the starter dog (4).

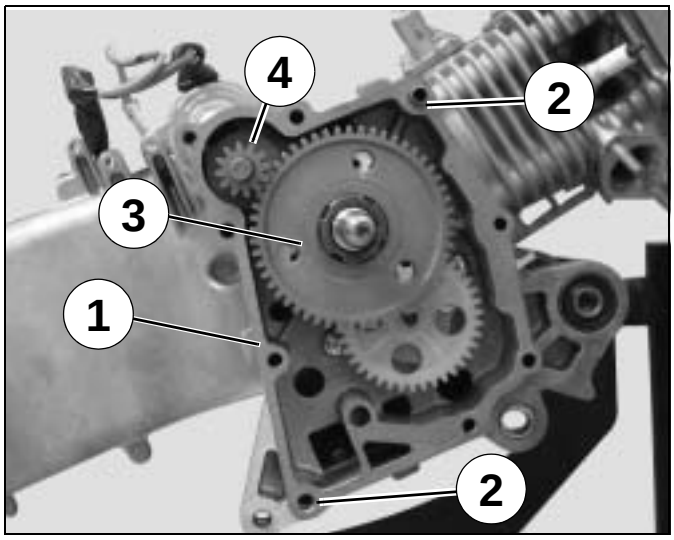

- Using pin spanner ref. 752237 immobilise the overrunning clutch (5).
- Using tool P/N 800673, remove the notched nut and the washer of the overruning clutch.

Tightening torque: 90 Nm.

✓	**The notched nut of the overrunning clutch has a left-hand thread.**

- Remove the overrunning clutch.

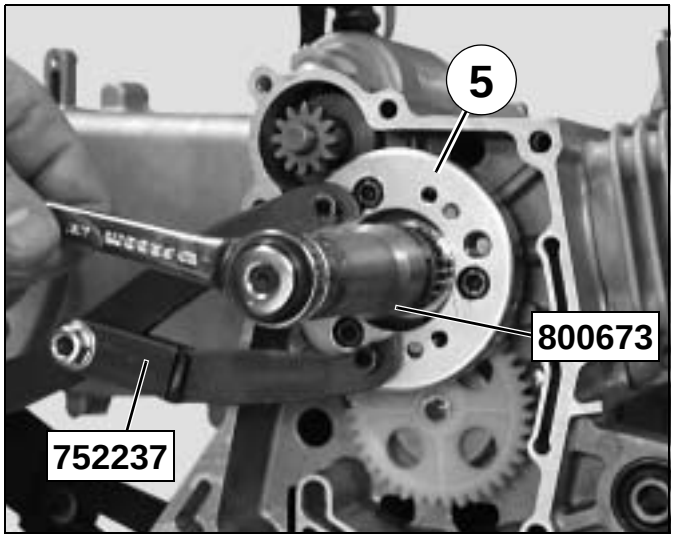

■ Checking the overrunning clutch

- Rotate the overrunning clutch by hand:
  - It must rotate in direction (A).
  - It must be block in direction (B).
- If it doesn't, replace the overrunning clutch.

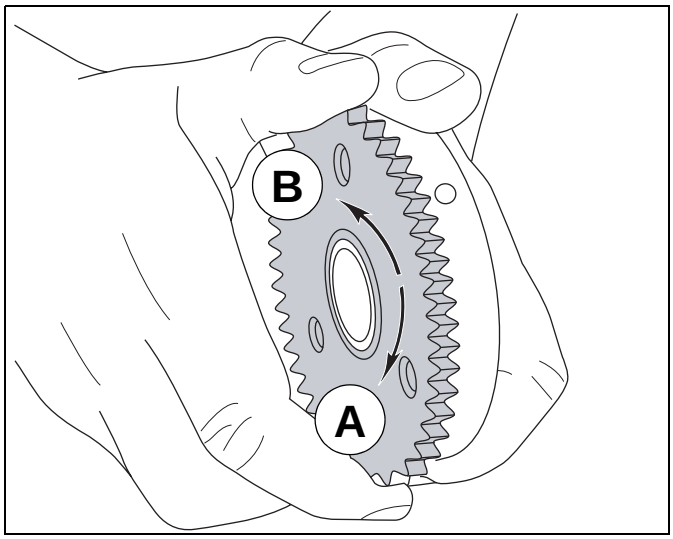

Reproduction ou traduction, même partielle, interdite sans autorisation écrite de Peugeot Motocycles

- Using fitting tool P/N 756668, fit a new lightly greased gasket (1).

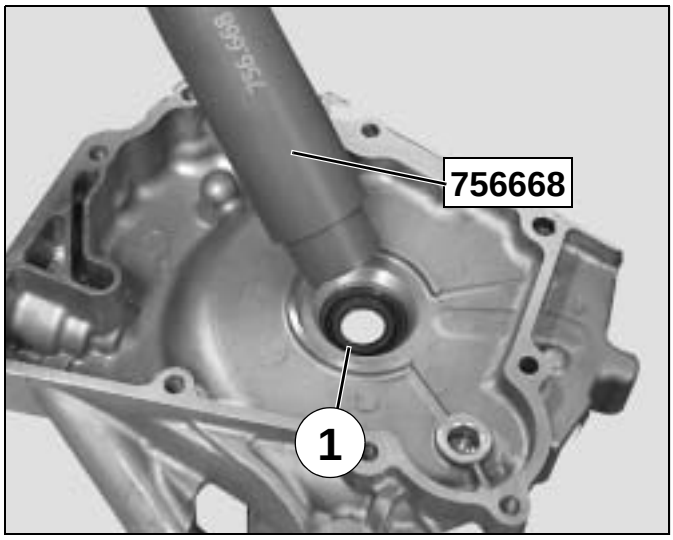

Reproduction ou traduction, même partielle, interdite sans autorisation écrite de Peugeot Motocycles

CYLINDER HEAD/CYLINDER/PISTON

■ Removal of the cylinder head

- Remove the cylinder housing (1 screw). Left side.
- Removal of the camshaft gear cover (1) (2 screw).

Tightening torque: 10 Nm.

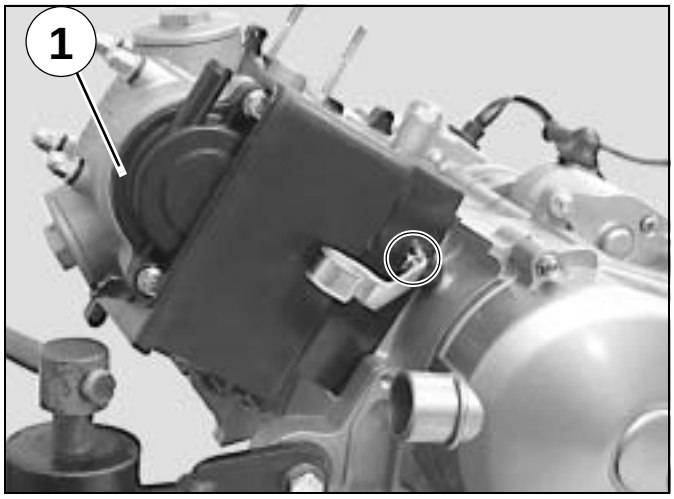

- Turn the crankshaft in the direction of operation to line up the mark (A) on the cam shaft gear with the mark (B) on the cylinder head.

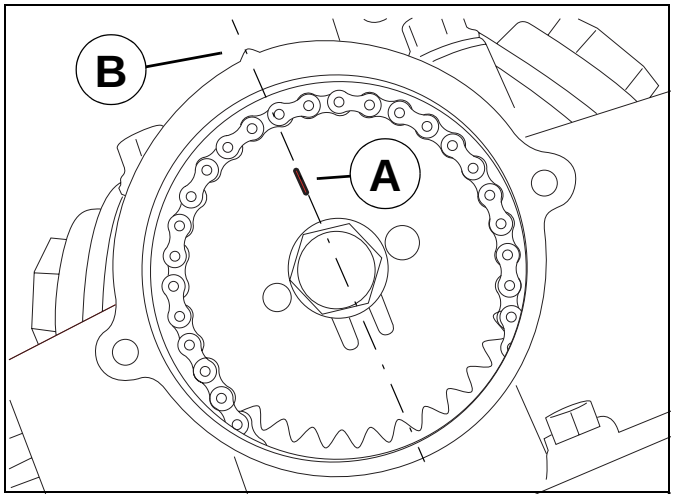

- Removal of the chain tensioner (3) plug (2).
- Remove the seal.
- Remove the tension spring.

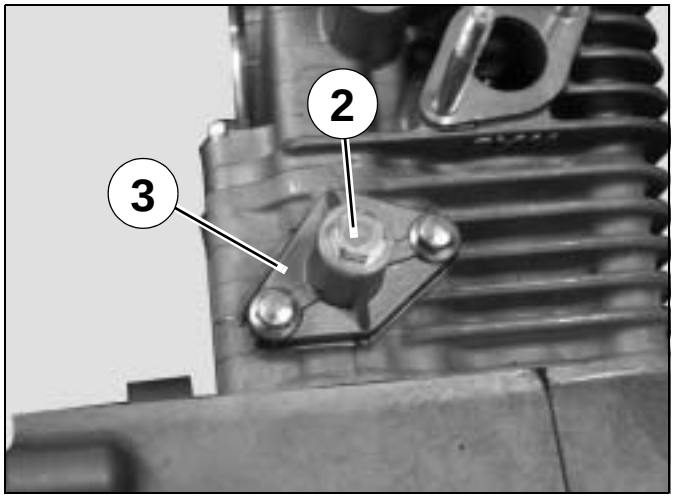

Reproduction ou traduction, même partielle, interdite sans autorisation écrite de Peugeot Motocycles

- Remove the chain tensioner and slacken it by pressing the ratchet tooth (A).

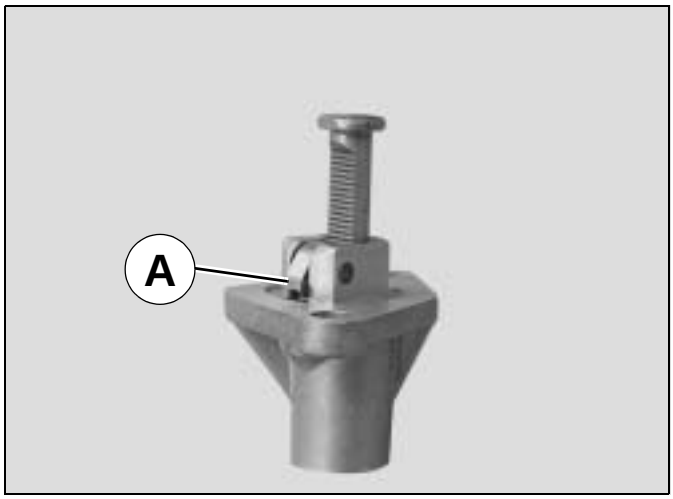

- Immobilize the camshaft gear (4) using the adjustable pin wrench P/N 752237.
- Remove the camshaft gear.
- Tie a wire to the timing chain in order to prevent it from falling into the crankcase.

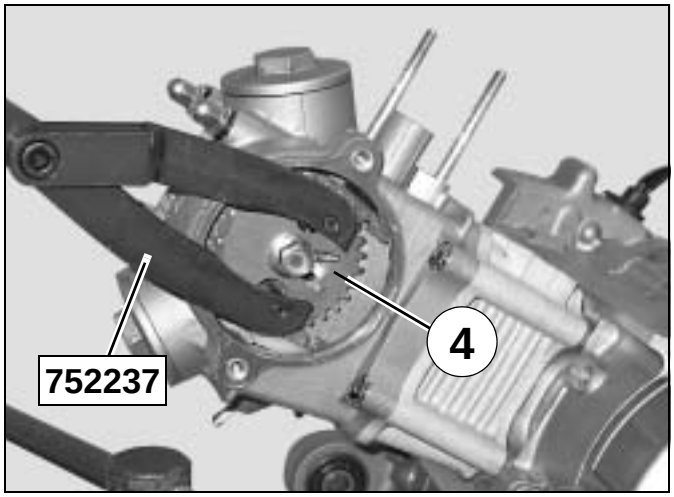

- Remove the 2 bolts (5).
- Gradually loosen in a crosswise order the 4 nuts which secure the cylinder head (6).
- Remove the 4 nuts and the 4 washers (6).

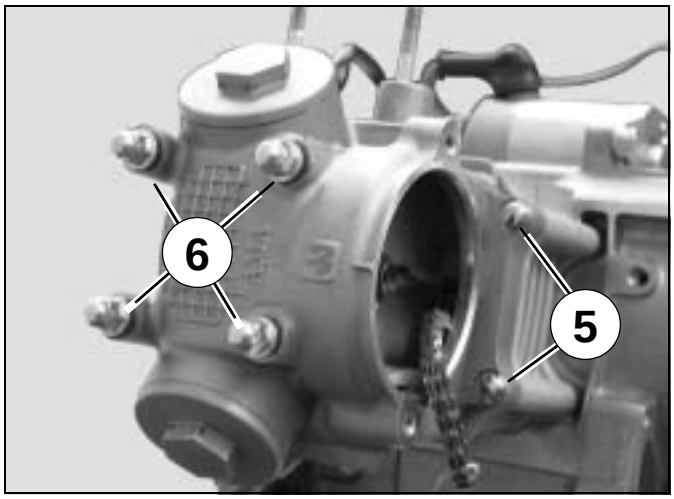

Reproduction ou traduction, même partielle, interdite sans autorisation écrite de Peugeot Motocycles

- Remove the cylinder head.
- Removal of the metal gasket (7) and the 2 centring pillars (8).

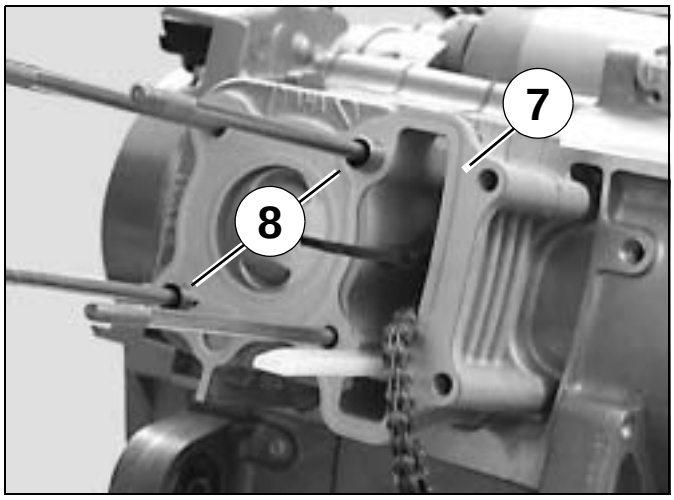

■ Removal of the camshaft and/or rockers

- Remove the cylinder head.
- Remove the stopper plate (1).
- Remove the valve clearance adjustment covers (2).

	Apply the correct tightening torque to the valve clearance adjustment covers. **Tightening torque: 15 Nm**

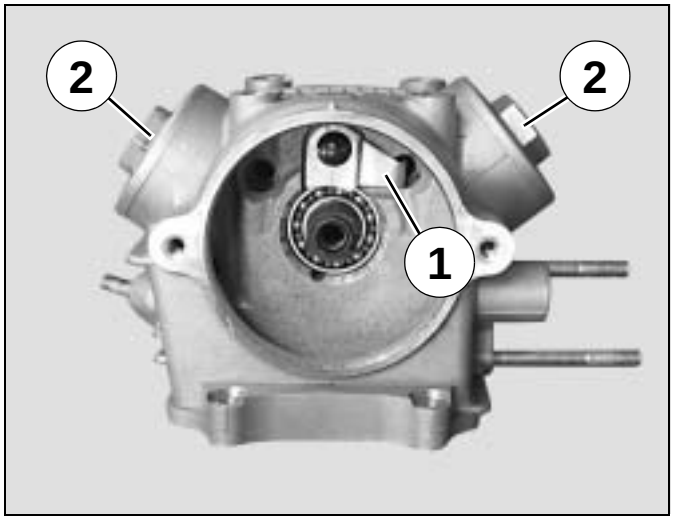

- Remove the pins from the rockers using a 8 mm screw.

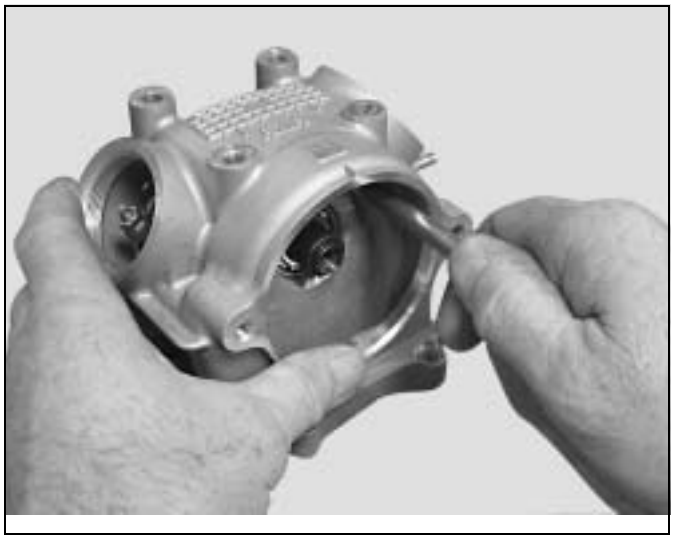

Reproduction ou traduction, même partielle, interdite sans autorisation écrite de Peugeot Motocycles

- Remove the inlet (3) and exhaust (4) rockers.
- Remove the springs. (5).
- Remove the camshaft (6).

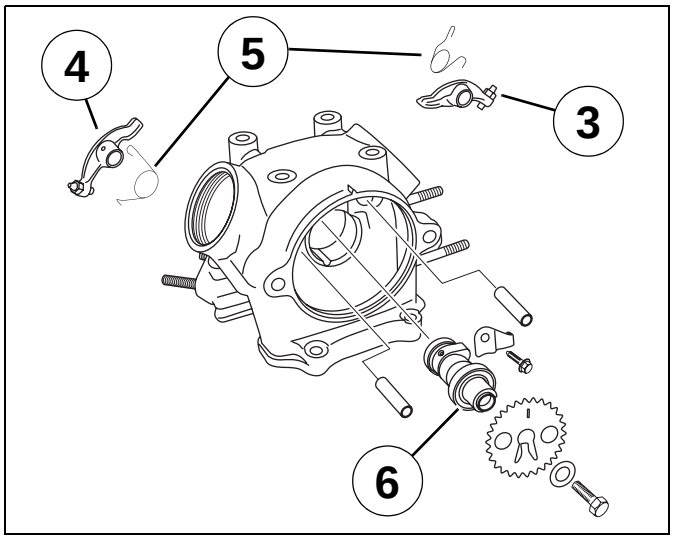

■ Removal of the valves or valve stem seals

- Compress the spring of one of the valves using the valve lifter P/N 754035.
- Remove the 2 half cones (1).
- Uncompress the spring and remove the tool.

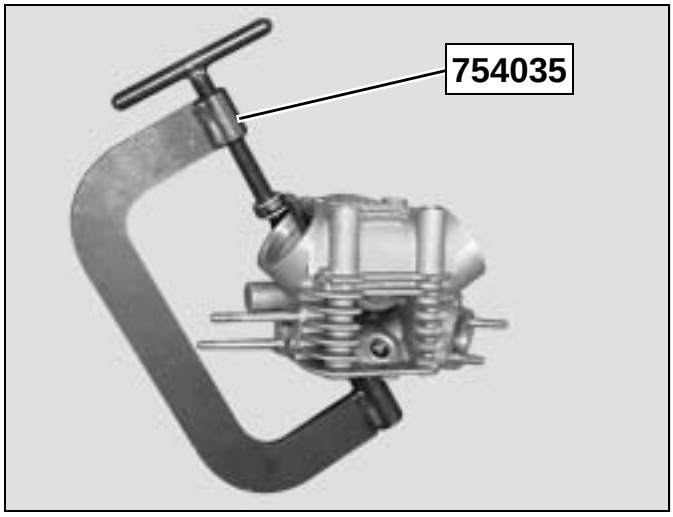

- Remove:
  - The upper cup (2).
  - The spring (3).
  - The valve (4).
  - The valve stem seal (5).
- Remove the 2nd valve in the same way.

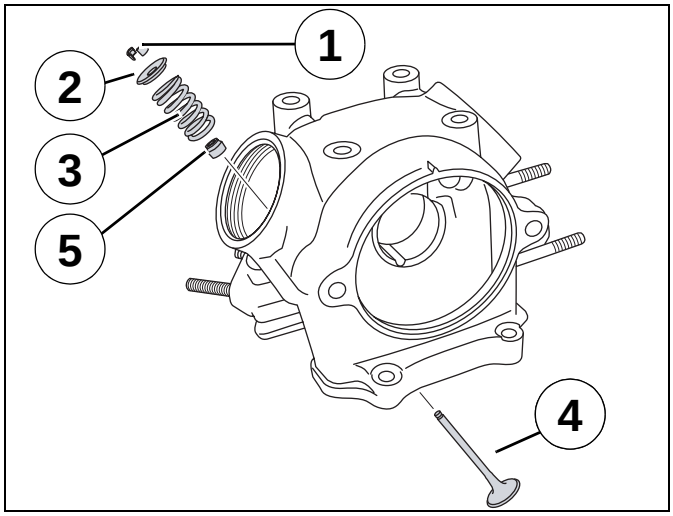

Reproduction ou traduction, même partielle, interdite sans autorisation écrite de Peugeot Motocycles

In case you remove the seal of a valve stem (5), replace it with a new seal after removing all the carbon residues which could remain inside the cylinder head.

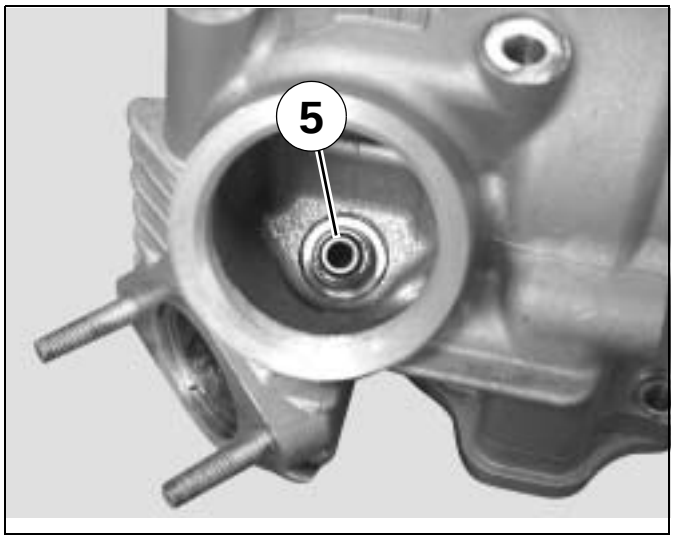

- When re-installing, lubricate the 2 half cones (1) so as to hold them in the groove of the valve's stem.
- Do not place the 2 half cones into the cup forcefully with the tool when decompressing the spring.

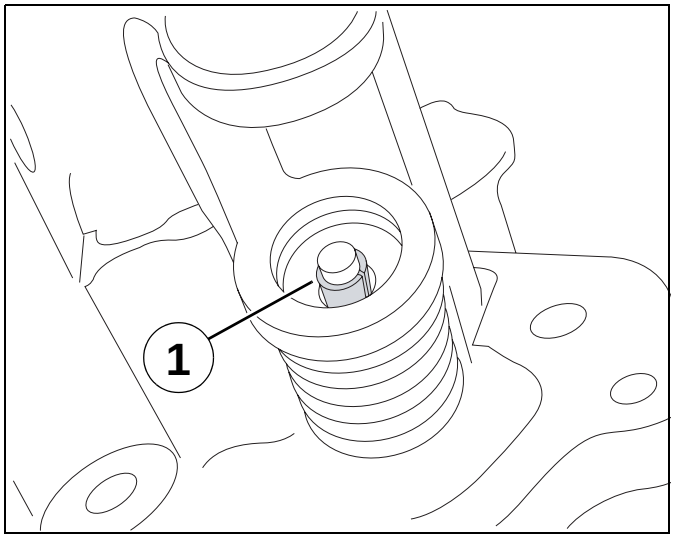

When re-installing, the camshaft bearings, the rocker shafts and the contact between the rockers and the valves shall well lubricated in order to avoid any risk of seizure when starting the engine (Use lithium soap grease). Seals and valve stems must be lubricated.

Reproduction ou traduction, même partielle, interdite sans autorisation écrite de Peugeot Motocycles

■ Removal of the cylinder / piston

- Remove the cylinder head.
- Remove the chain guide pad (1).

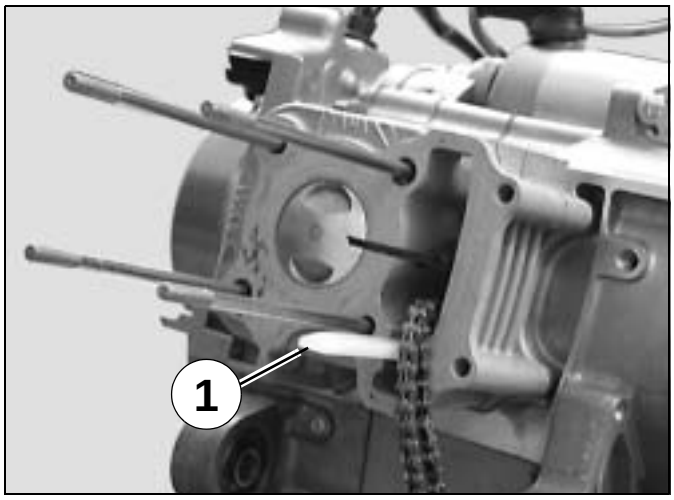

- Remove the cylinder.
- Remove the base gasket (2) and the 2 centring pillars (3).

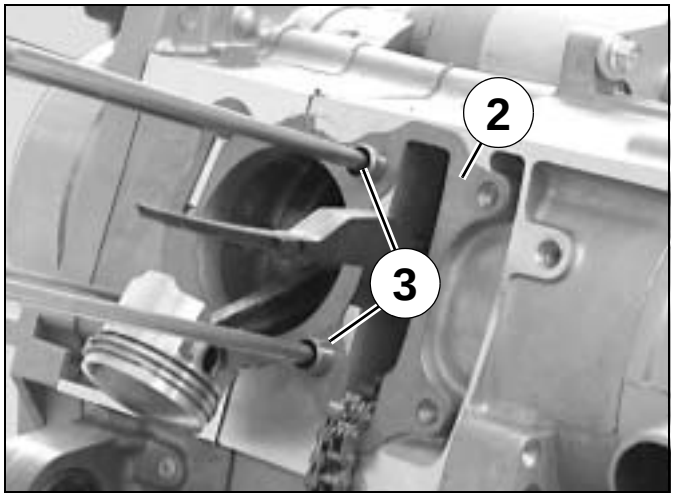

- Remove one of the circlips (4) with pliers.
- Remove the gudgeon pin.
- Remove the piston.

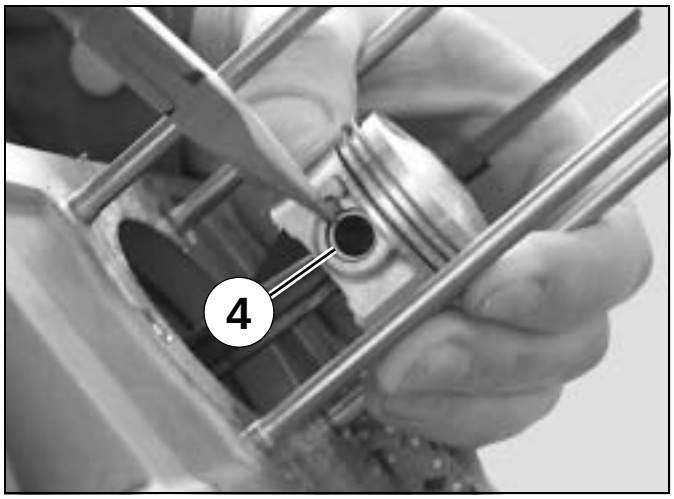

Reproduction ou traduction, même partielle, interdite sans autorisation écrite de Peugeot Motocycles

■ Checking the cylinder

- The cylinder should show no traces of scoring or seizure.

Cylinder diameter: 37.015 to 36.995 mm

Utilisation limit: 37.500 mm

■ Checking the piston

- The piston should show no traces of scoring or seizure.
- The rings must be free in their grooves.
- Measure the piston diameter at 9 mm from the piston skirt.

Piston diameter: 36.985 to 37.005 mm

Utilisation limit: 36.900 mm

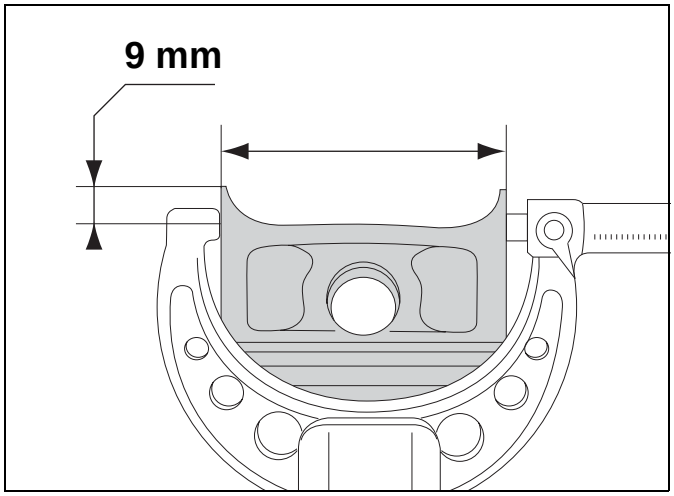

■ Checking the piston rings

- Carefully remove the piston rings.
- Place a ring in the bore parallel to it and measure the gap using a feeler gauge.

Piston ring gap:

- Top compression ring gap: 0.015 to 0.050 mm.
- Compression ring gap: 0.015 to 0.050 mm.
- Oil control ring gap: 0.2 to 0.7 mm.

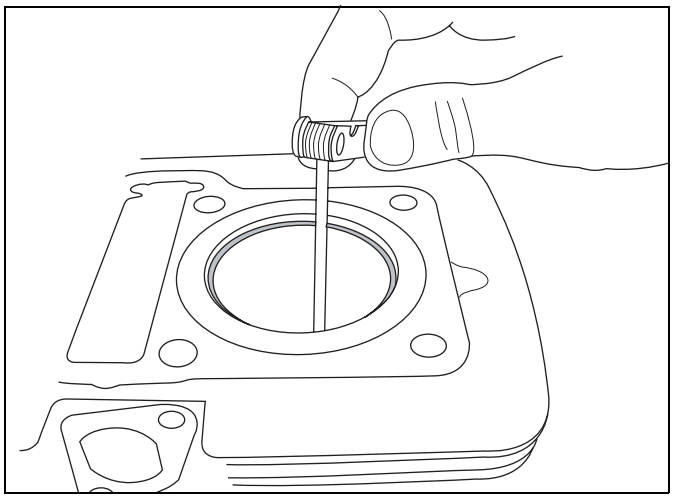

■ Installing the piston rings on the piston

- Proceed in the following order in order to install the oil control rings.
  - Install the spring (1) (no special direction).
  - Install the 2 piston rings (2) on each side of the spring by offsetting the gap of each ring (no special direction).

- Install the compression ring (3) by placing the 2R mark upwards.
- Install the top compression ring (4) by placing the 1R mark upwards.

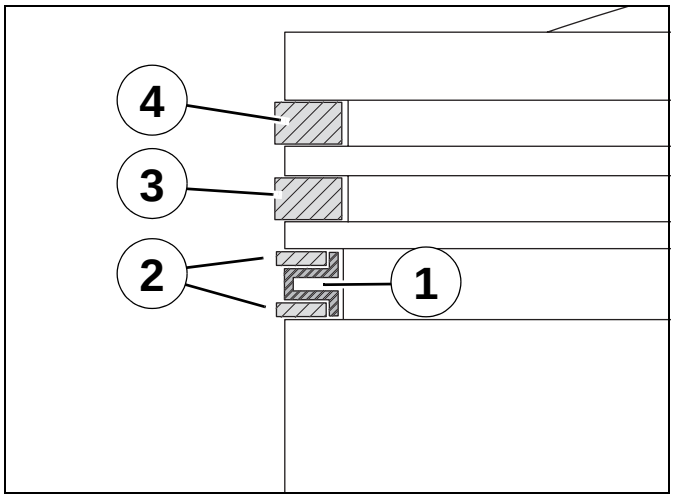

Reproduction ou traduction, même partielle, interdite sans autorisation écrite de Peugeot Motocycles

■ Fitting the piston

- Install the piston so that the mark IN is on the inlet side.
- Fit the gudgeon pin and circlips.

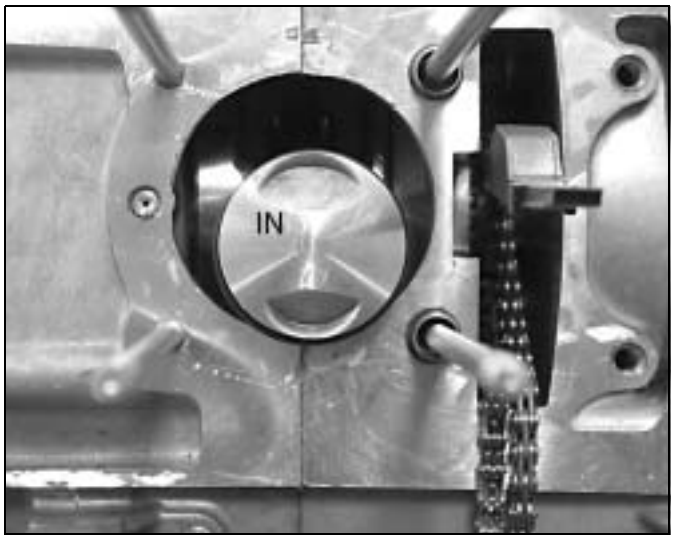

- The circlip gaps (1) must face upwards or downwards, but under no circumstances to the side.

N	**Use new rings.**

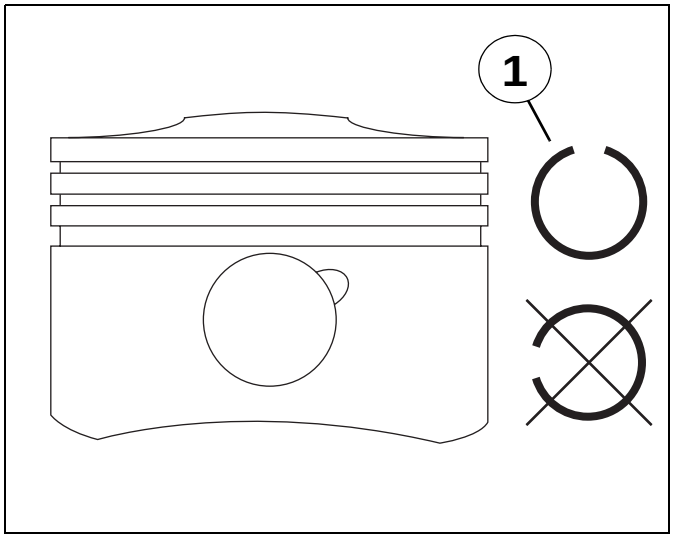

■ Fitting the cylinder

- Position the piston ring gap as follows:
  A. Top compression ring gap.
  B. Compression ring gap.
  C. Upper oil control ring gap.
  D. Lower oil control ring gap.

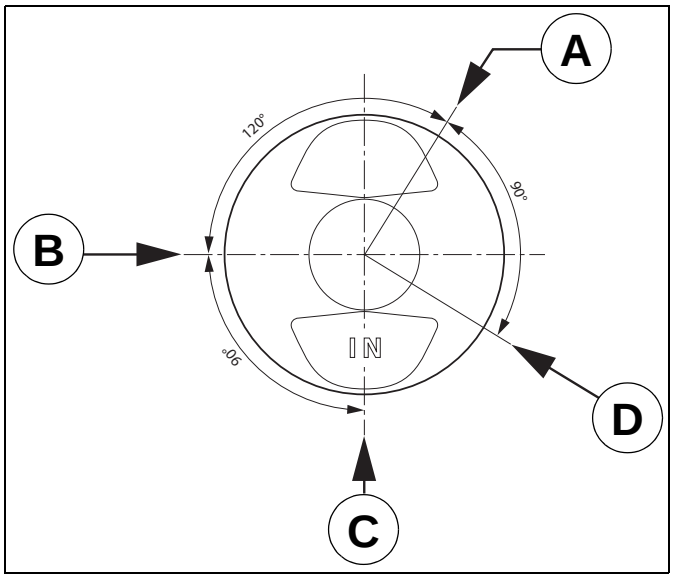

Reproduction ou traduction, même partielle, interdite sans autorisation écrite de Peugeot Motocycles

- Install the cylinder base gasket and the 2 guiding pillars on the crankcase.
- Fit the cylinder over the piston by compressing the piston rings by hand.

	Lubricate the cylinder.

- Fit the chain and the chain guide tensioner into the timing chain tunnel.

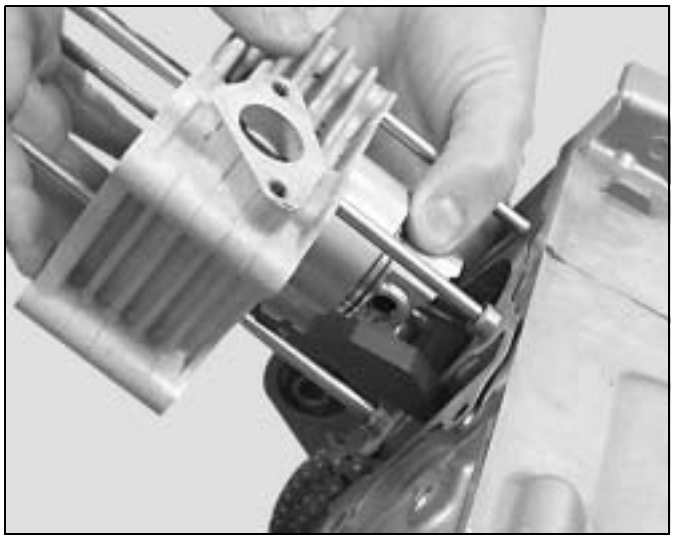

- Fit the chain pad (1).
- Fit the 2 guiding pillars (2) and the metal gasket on the cylinder (3).

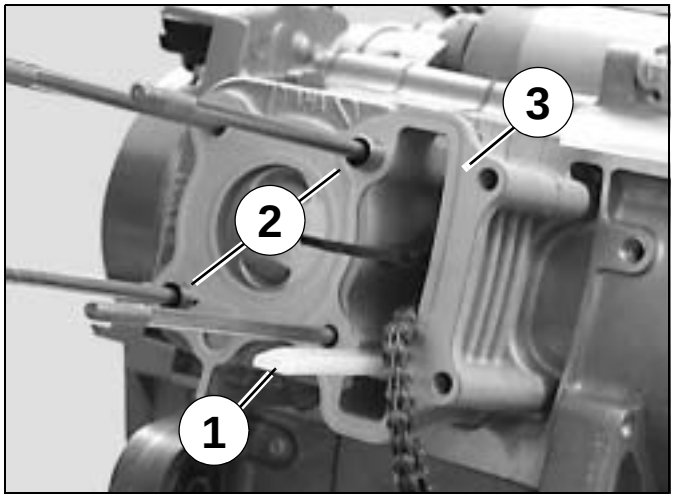

- Install the cylinder head.
- Tighten the cylinder head securing 4 nuts working diagonally in 2 or 3 steps (4).

Tightening torque: 20 Nm.

- Fit and tighten the 2 fixing bolts (5).

Tightening torque: 12 Nm.

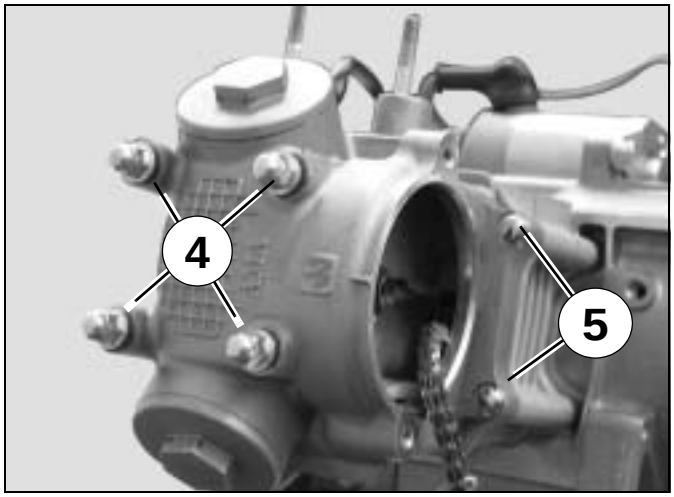

Reproduction ou traduction, même partielle, interdite sans autorisation écrite de Peugeot Motocycles

■ Setting the timing

- Rotate the flywheel magneto to bring the "T" mark in front of the crankcase boss (C).

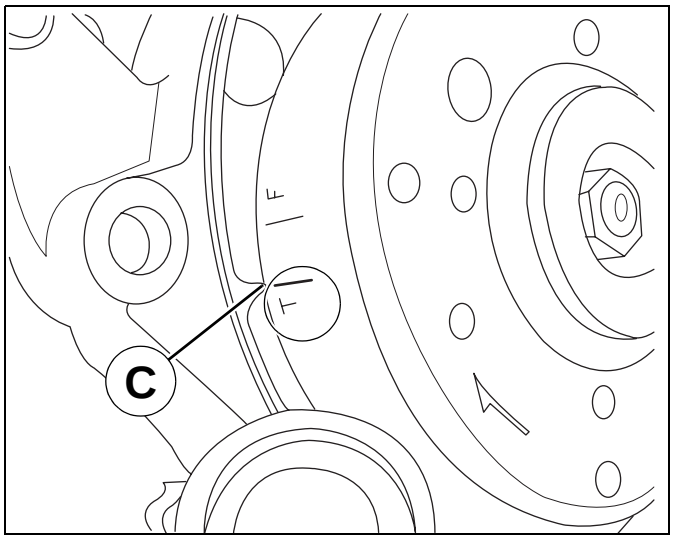

- Fit the gear in the chain on one of the sides.
- Using a tool with a small diameter, finish fitting the chain around the gear.
- Install the camshaft gear.

- Make sure the mark (A) of the camshaft gear is aligned with the mark (B) of the cylinder head.
- If necessary, dislodge the gear from the camshaft without removing it and move the chain around the gear on the required side.

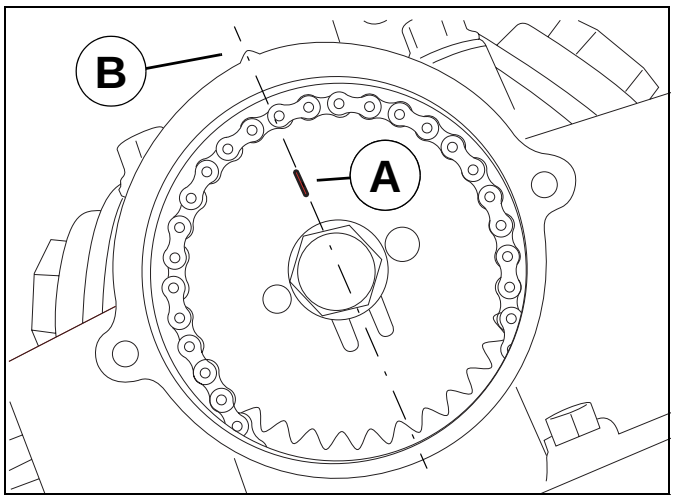

Reproduction ou traduction, même partielle, interdite sans autorisation écrite de Peugeot Motocycles

- Immobilize the camshaft gear (1) using the adjustable pin wrench P/N 752237.
- Tighten the camshaft gear screw.

Tightening torque: 20 Nm.

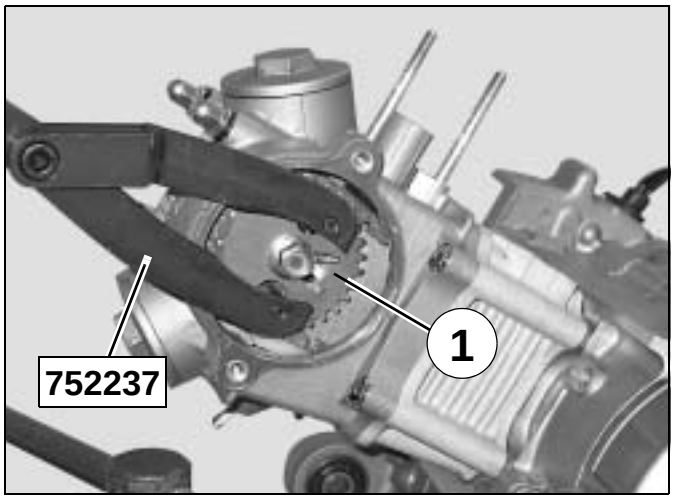

- Fit the chain tensioner gasket (2).
- Install the chain tensioner and the 2 attachment screws (3).

Tightening torque: 10 Nm.

- Install the spring (4).
- Fit the chain tensioner gasket (5).
- Install the tensioner cap (6).

Tightening torque: 8 Nm.

- Check the timing.
- Install the timing gear cover.

Tightening torque: 10 Nm.

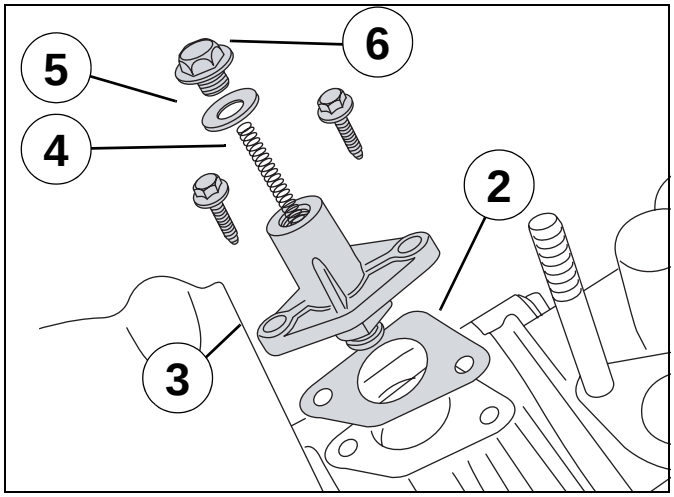

■ Checking the timing

- Rotate the engine twice: 2 revolutions in the engine's operating direction.
- Check the alignment of the timing marks of the flywheel magneto with the mark (C) of the cover, and of the camshaft gear with the mark (B) of the cylinder head.
- If the marks are not alined, reset the valve timing.

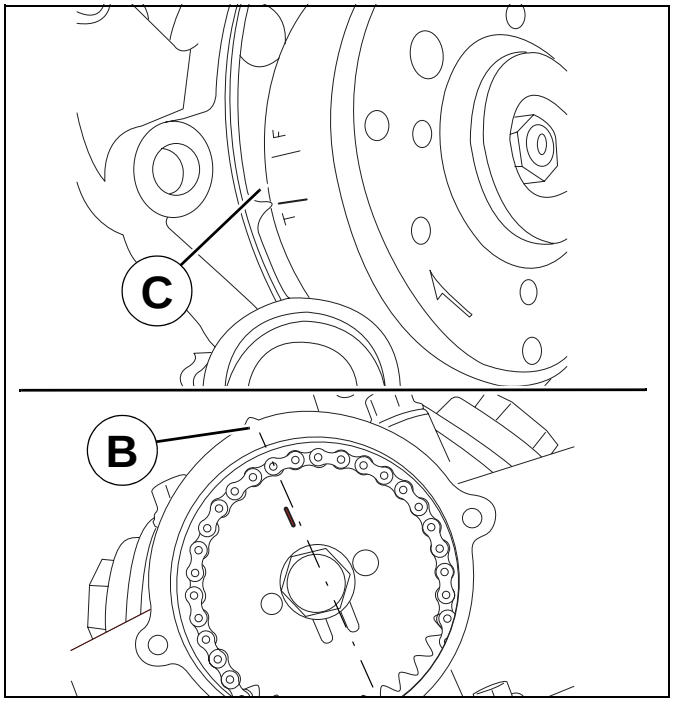

Reproduction ou traduction, même partielle, interdite sans autorisation écrite de Peugeot Motocycles

■ Installing the valve clearance

- Remove the cam shaft gear cover.
- Turn the crankshaft in the direction of operation to line up the mark (A) on the cam shaft gear with the mark (B) on the cylinder head.

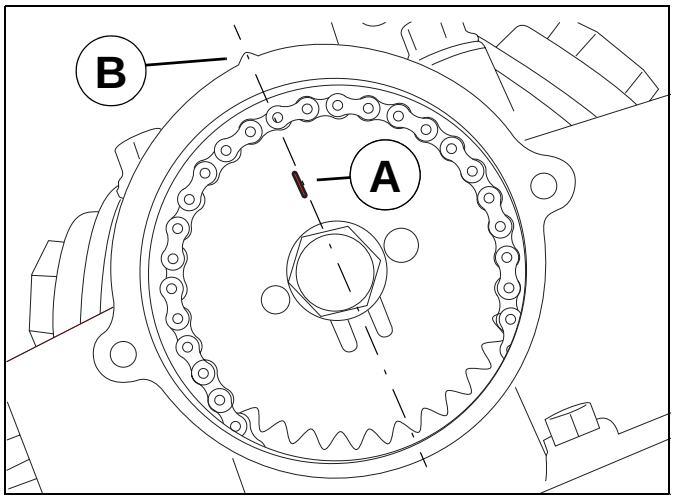

- Remove the valve clearance adjustment covers

	Apply the correct tightening torque to the valve clearance adjustment covers. **Tightening torque: 15 Nm**

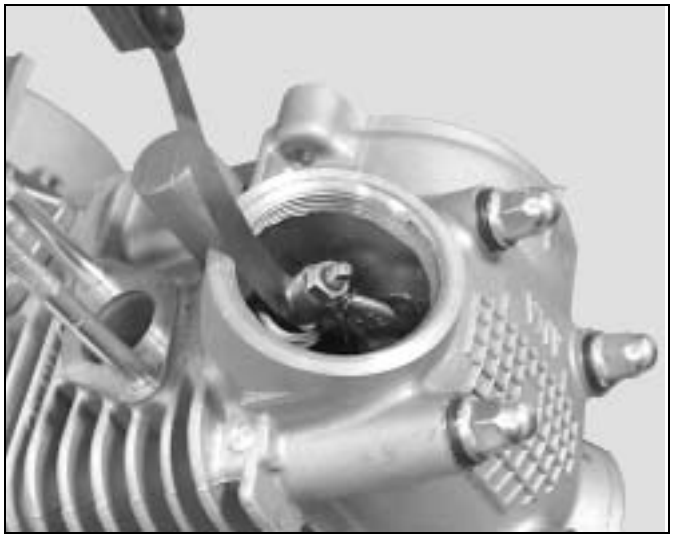

- Using the set of feeler gauges, measure the clearance of each valve.

Clearances:

- 0.05 ± 0.02 mm at the intake.
- 0.10 ± 0.02 mm at the exhaust.

- If the clearance is not correct, adjust by means of the cam follower screw.

■ Checking the valve clearance

- At the intake a 0.10 mm feeler gauge shouldn't go.
- At the exhaust a 0.15 mm feeler gauge shouldn't go.

- On the contrary, if the fealer gauge goes, reset the clearances.

Reproduction ou traduction, même partielle, interdite sans autorisation écrite de Peugeot Motocycles

CRANKCASE

■ Removal of the crankshaft

- Remove the primary drive.
- Remove the overrunning clutch.
- Remove the cylinder and the piston.
- Remove the starter motor (2 screw).

Tightening torque: 10 Nm.

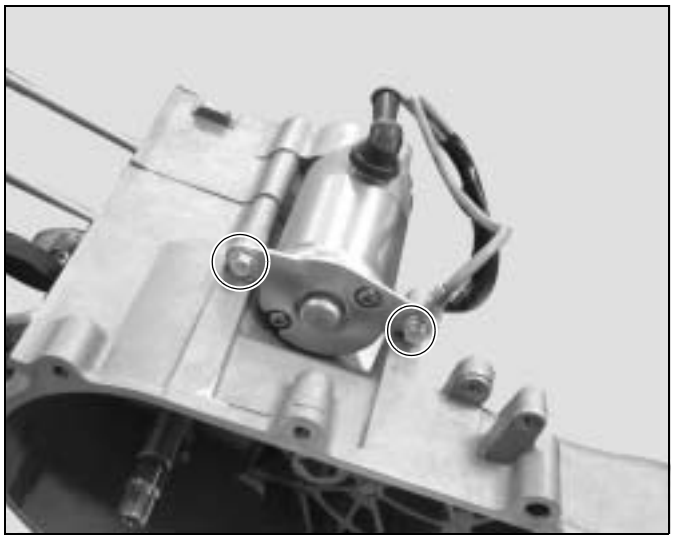

- Remove the drive gear from the oil pump (1).
- Remove the circlip (2).
- Remove the oil pump gear.
- Remove the pin.

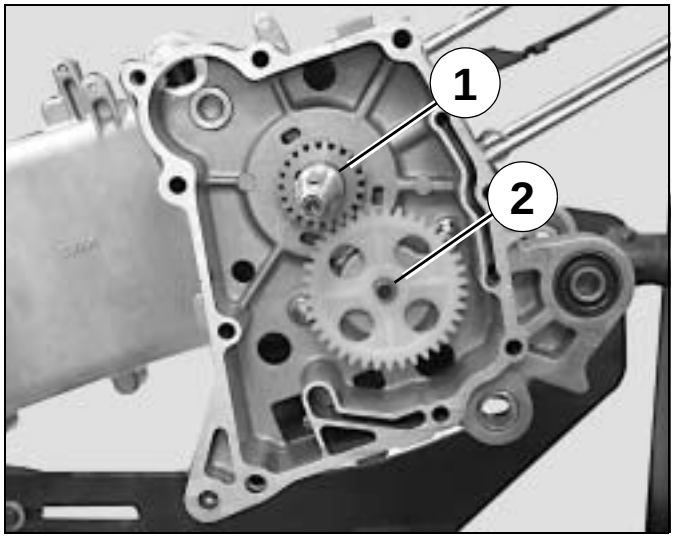

- Remove the 2 screws that secure the RH half casing.
- Remove the RH casing.
- Remove the 2 centring pillars and the paper gasket.

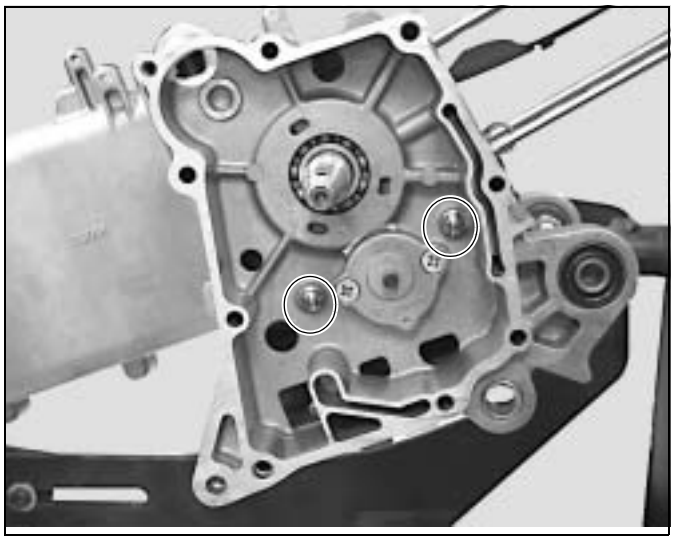

Reproduction ou traduction, même partielle, interdite sans autorisation écrite de Peugeot Motocycles

- Disengage the timing chain from the crankshaft gear.
- Removing the the cranshaft and conrod assembly.
- Remove the timing chain and notice its direction of rotation.

■ Checking the crankshaft and conrod assembly

- Using a set of shims, check the big end side play.
- The maximum side play on the conrod end must not exceed: 0.55 mm.

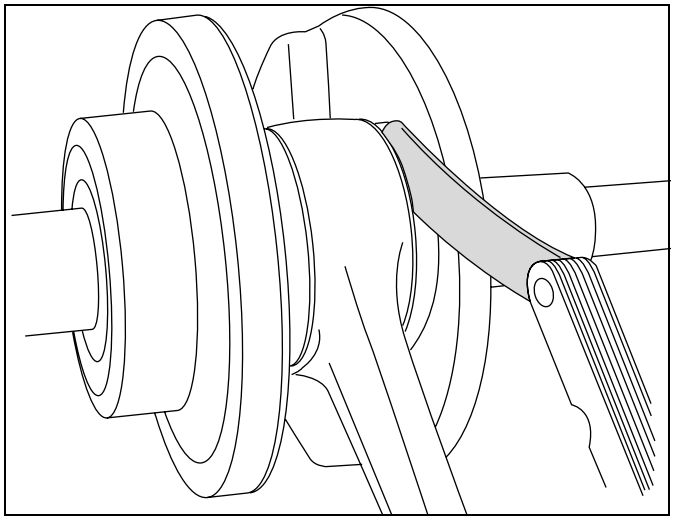

The runout at the crankshaft ends shall not exceed 0.1 mm and shall be measured at:

- 90 mm from the transmission side end.
- 60 mm from the flywheel magneto end.

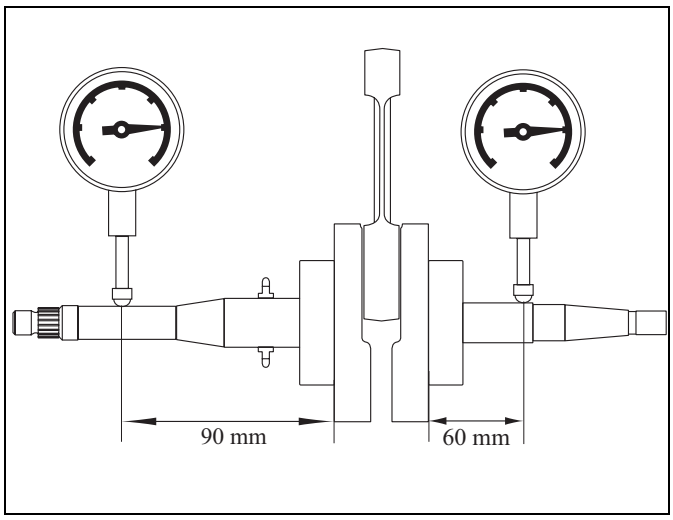

Reproduction ou traduction, même partielle, interdite sans autorisation écrite de Peugeot Motocycles

■ Fitting the conrod and crankshaft assembly

- Using fitting tool P/N 757990, fit a new lightly greased gasket (1).

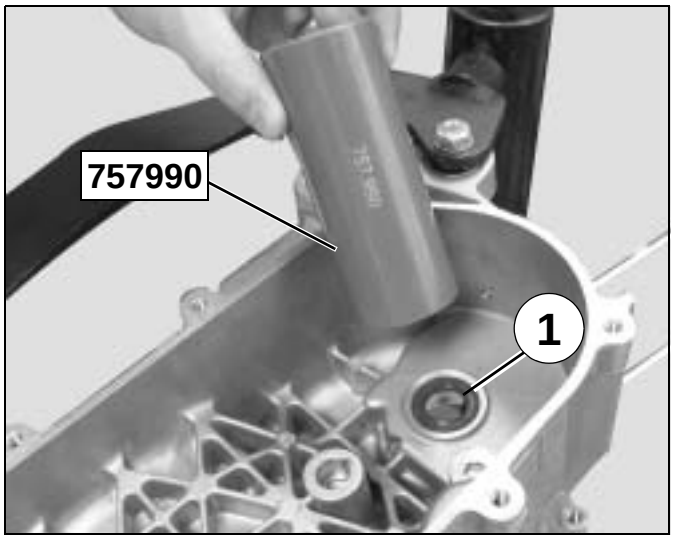

- Position the LH casing horizontally.
- Fit the timing chain (2) through the timing well.
- Fit the conrod and crankshaft assembly into the LH crankcase.

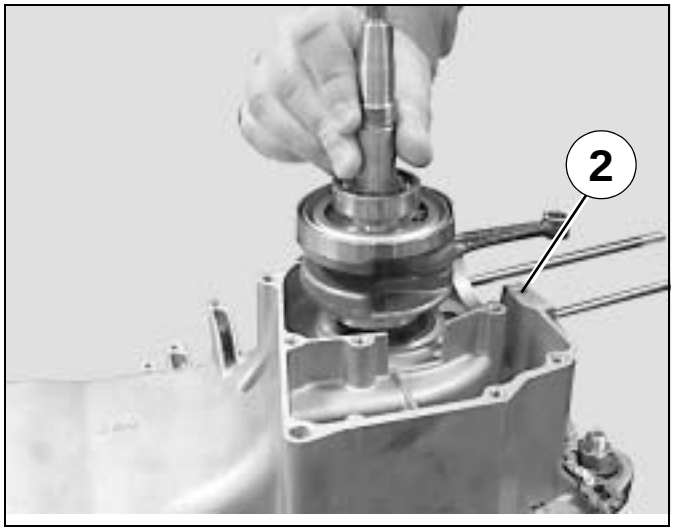

- Fit the 2 guiding bushes (3) to the LH casing and a new paper gasket (4), do not use oil or grease.
- Place the RH casing over the LH casing assembly.

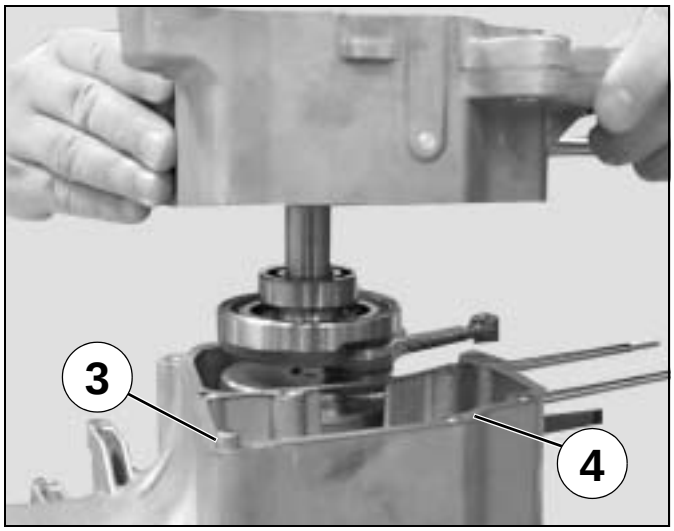

Reproduction ou traduction, même partielle, interdite sans autorisation écrite de Peugeot Motocycles

- Fit and tighten the 2 clamping bolts.

Tightening torque: 12 Nm.

- Trim the casing gasket in (A).

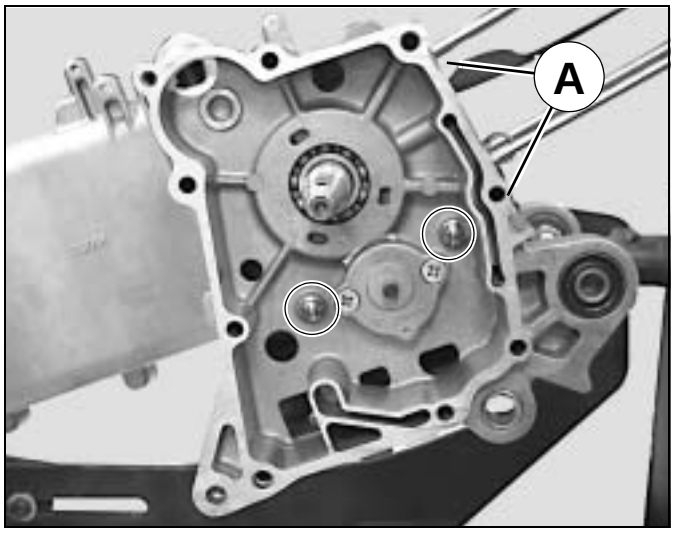

Reproduction ou traduction, même partielle, interdite sans autorisation écrite de Peugeot Motocycles

P/N. MA0010GB

Peugeot Motocycles is constantly improving its vehicles. It therefore reserves the right to remove, modify or add any reference mentioned in this manual.

DC/APV 05/2009 (non contractual pictures)

PEUGEOT